EXPLODED DRAWING A

Model No. NTRW99147.0 R0618A

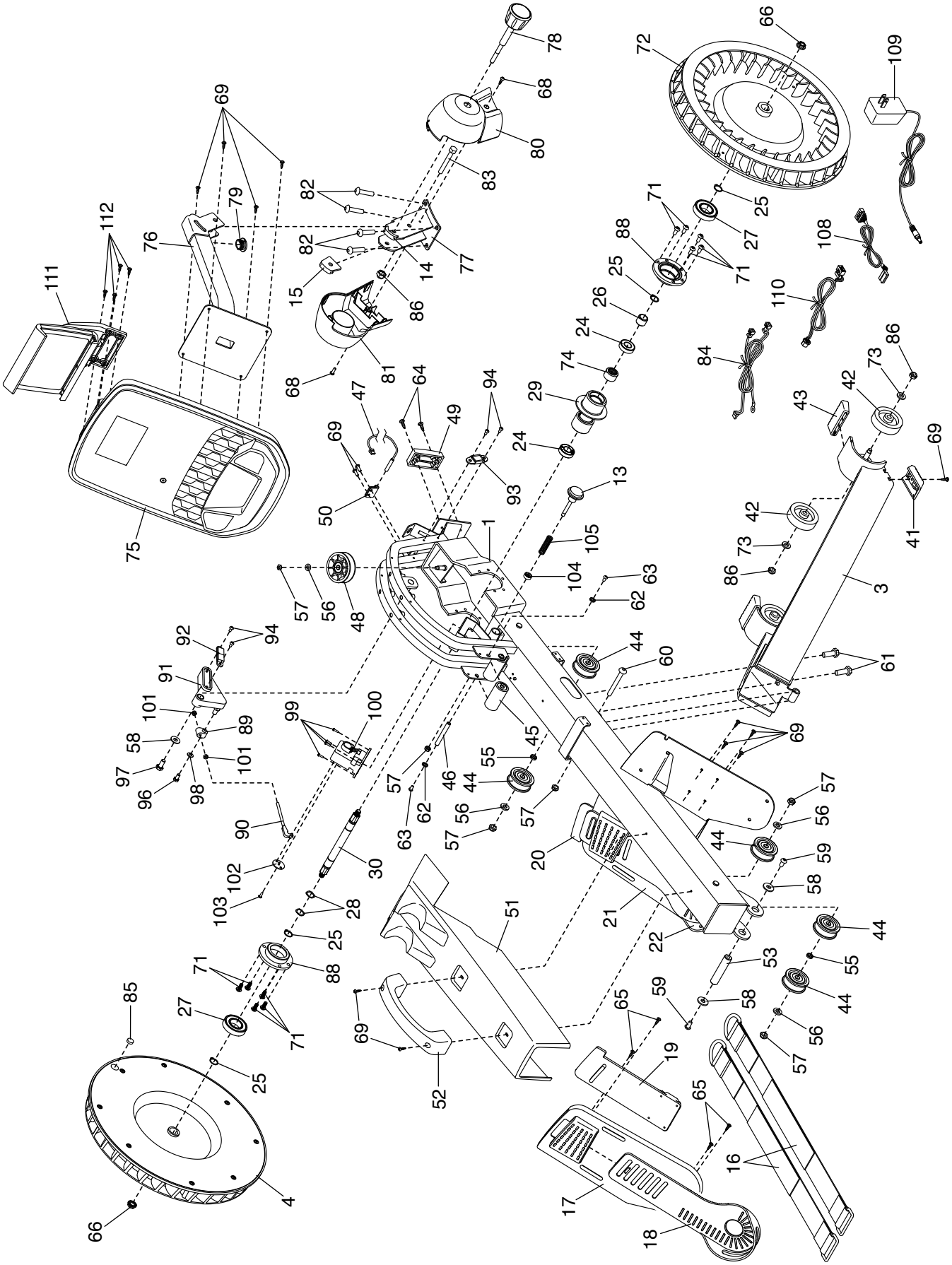

EXPLODED DRAWING B
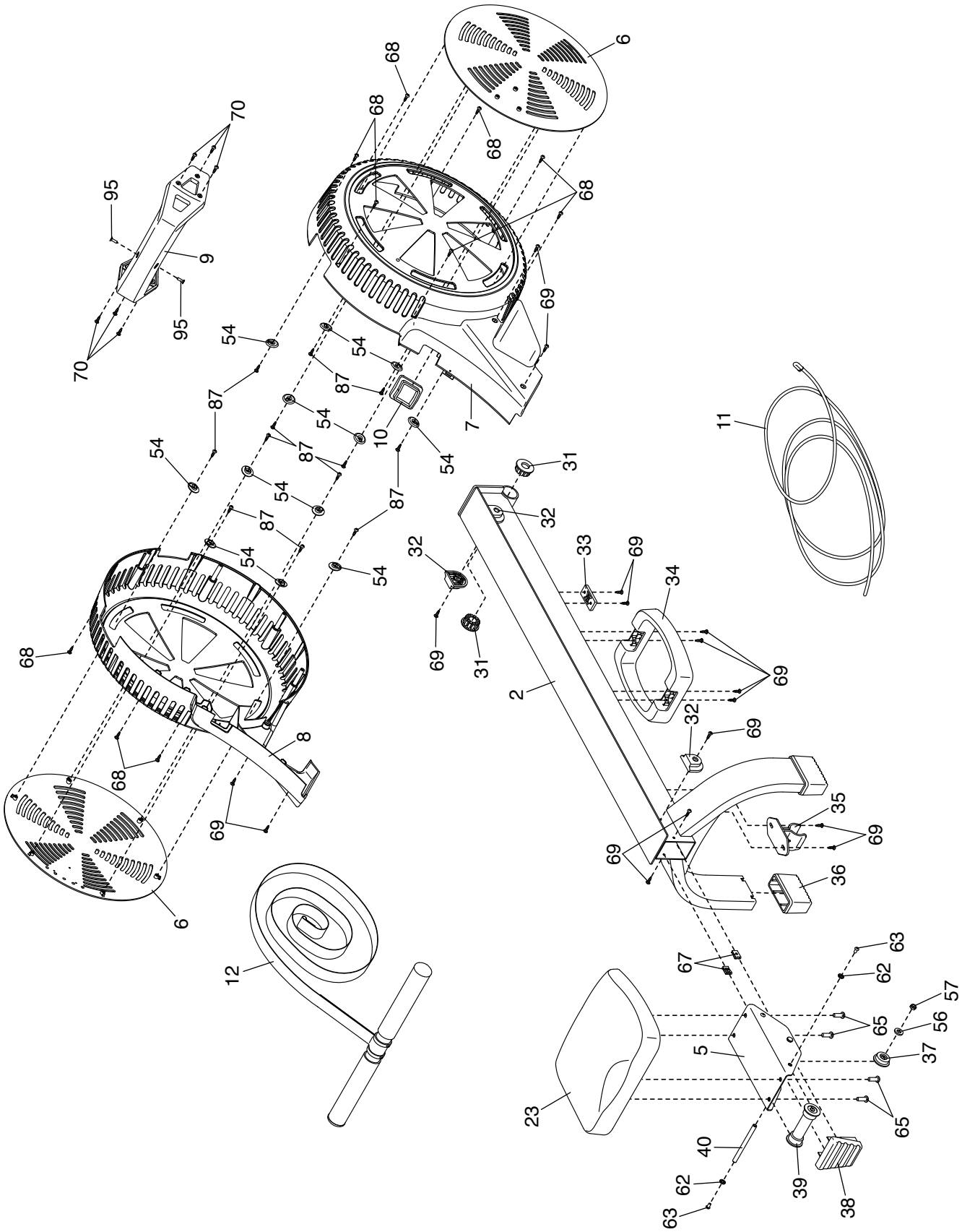
Model No. NTRW99147.0 R0618A