EXPLODED DRAWING—Model No. PCTL53691

R0901A

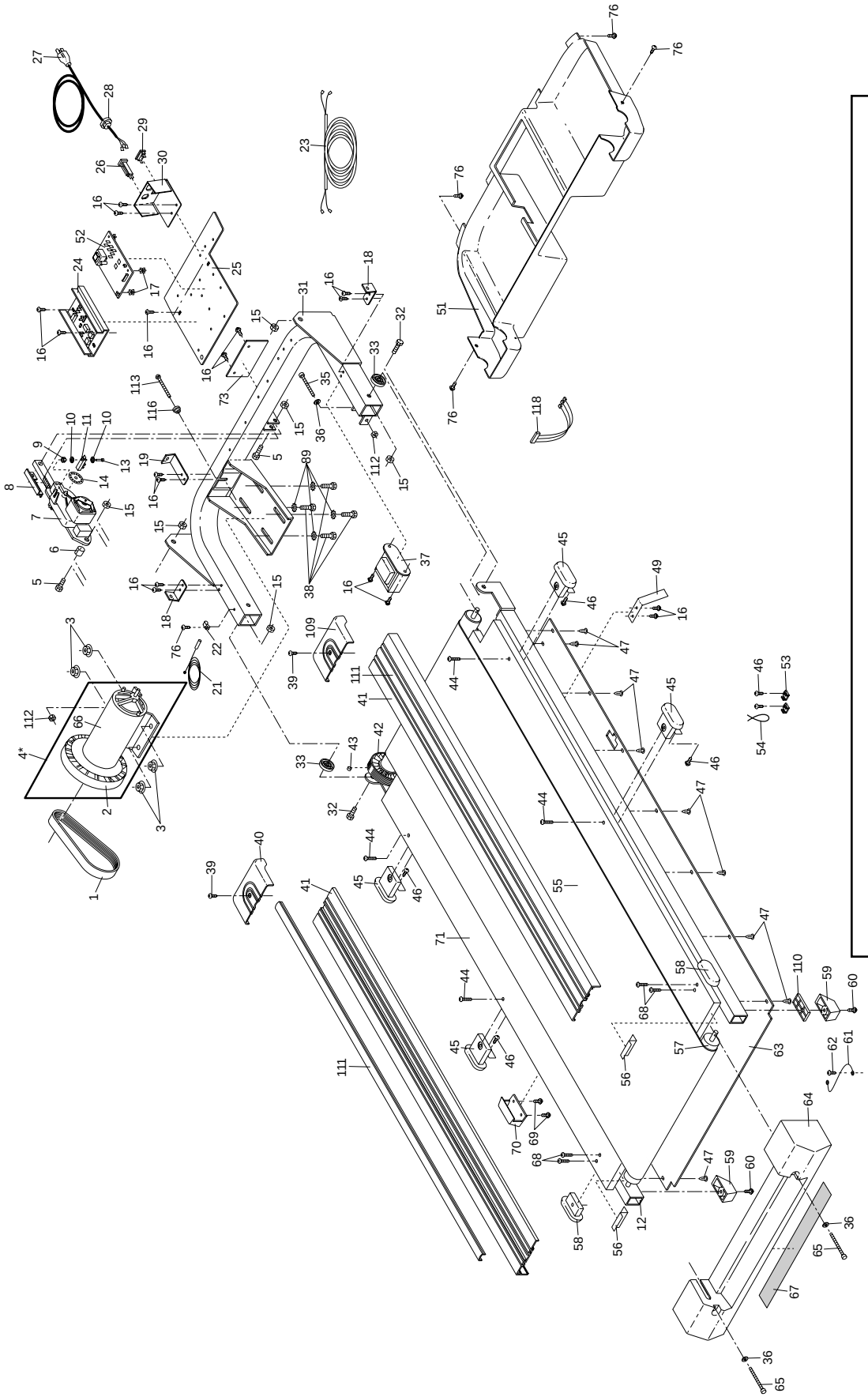

REMOVE THIS EXPLODED DRAWING FROM THE USER'S MANUAL. SAVE THE EXPLODED DRAWING FOR FUTURE REFERENCE.

To identify the parts shown on this exploded drawing, refer to the PART LIST on page 15 of the USER'S MANUAL.

EXPLODED DRAWING—Model No. PCTL53691
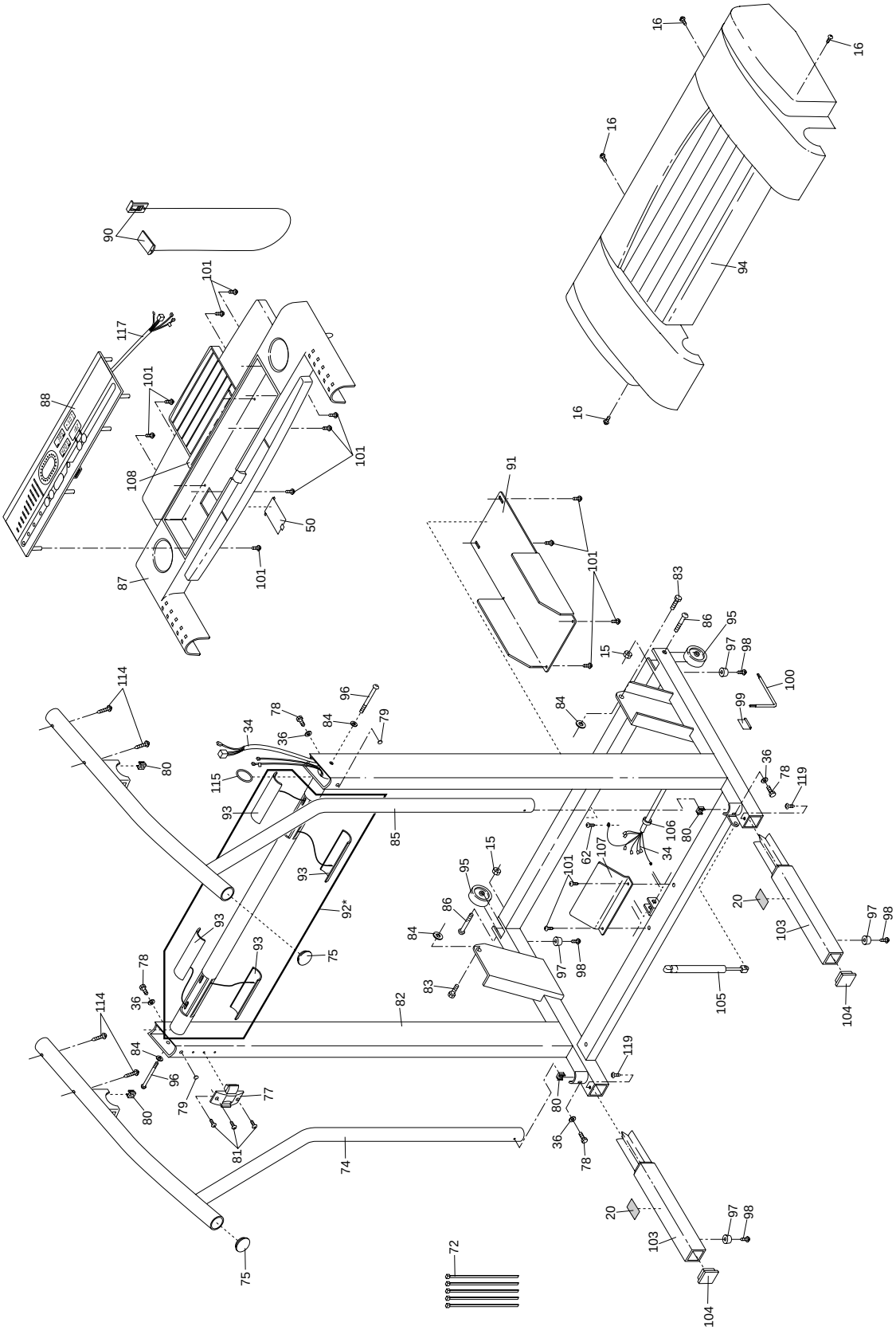
R0901A