EXPLODED DRAWING - Model No. PF352300

Rev. 2/91

Specifications are subject to change without notice.

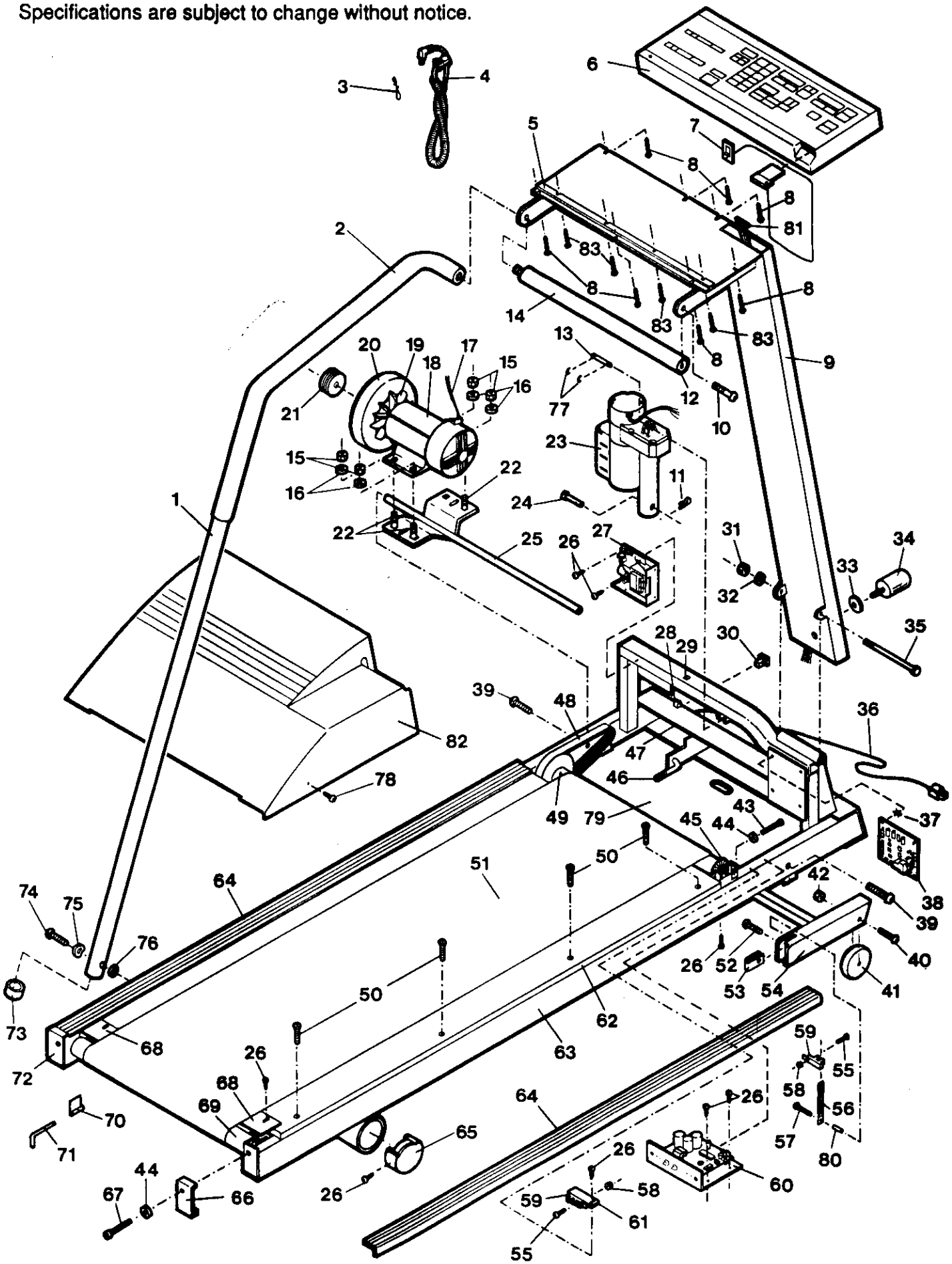

MODEL NUMBER: PF35230 MODEL/PART BOOK LISTING PAGE 1
VERSION: 00 INI023P1
PRODUCT NAME: PROFORM 2010 EXL RUN DATE: 5/07/96
PRODUCT DESC: TREADMILL RUN TIME: 12:57:37

KEY NUMBER	PART NUMBER	DESCRIPTION	QUANTITY
1	NLA	SIDE RAIL W/FOAM GRIP	1
2	102116	SIDE RAIL FOAM GRIP	1
3	054013	CLOTHES CLIP	1
4	119946	PULSE MONITOR CLIP	1
5	103851	Z-PLATE *	1
6	104454	CONSOLE	1
7	104452	SAFETY KEY/CLIP	1
8	013322	CONSOLE SCREW	6
9	103598	UPRIGHT POST	1
10	013496	HANDRAIL BOLT	1
11	015043	COTTER PIN	1
12	101941	HANDRAIL W/FOAM GRIP	1
	.	102108 HANDRAIL	1
	.	102107 FOAM GRIP	1
13	015047	UPPER LIFT MOTOR PIN	1
14	102107	HANDRAIL FOAM GRIP	1
15	012082	MOTOR MOUNT NUT	4
16	101630	MOTOR MOUNT WASHER	4
17	031237	MOTOR CONNECT WIRE	1
18	114970	MOTOR ASSEMBLY	1
19	031226	FAN	1
20	021044	FLYWHEEL	1
21	020060	PULLEY	1
22	013445	MOTOR MOUNT BOLT	3
23	100155	INCLINE MOTOR	1
24	101639	LOWER LIFT MOTOR PIN	1
25	103234	MOTOR MOUNT BRACKET/SHAFT	1
26	013162	SCREW	23
27	102870	POWER BOARD	1
28	008148	HOOD MOUNT ANCHOR	3
29	016055	WIRE CLIP	3
30	109382	CIRCUIT BREAKER	1
31	012174	PIVOT NUT	1
32	014101	PIVOT WASHER	1
33	014050	LOCK KNOB WASHER	1
34	017103	LOCK KNOB	1
35	103286	PIVOT BOLT	1
36	031229	POWER CORD	1
37	015071	PLASTIC STAND-OFF	4
38	102871	INTERFACE BOARD	1
39	101627	PIVOT SHAFT BOLT	2
40	013399	WHEEL BOLT	2
41	052014	FRONT WHEEL	2
42	012108	WHEEL NUT	2
43	013275	FRONT ADJUSTMENT BOLT	1
44	014063	ADJUSTMENT WASHER	3
45	104456	SPEED DISC ASSEMBLY *	1
	.	103614 SPEED DISC	1
	.	103617 MOUNTING TAPE	1
	.	NOTE: IF THE SPEED DISC	0
	.	IS NOT DAMAGED, JUST SEND	0
	.	THE MOUNTING TAPE AND THE	0
	.	ASSEMBLY INSTRUCTIONS BY	0
	.	ORDERING PART #109903.	0

KEY NUMBER	PART NUMBER	DESCRIPTION	QUANTITY
46	103855	J-BOLT	1
47	019084	GROMMET	1
48	025063	BELT	1
49	104457	FRONT ROLLER/PULLEY	1
50	100691	PLATFORM BOLT	8
51	123833	WALKING BELT ASSEMBLY	1
52	013303	INCLINE LEG BOLT	2
53	012179	U-NUT	2
54	103232	INCLINE LEG	1
55	102959	SMALL BOLT	2
56	102900	INCLINE LADDER	1
57	103991	LADDER BOLT	1
58	012152	SMALL NUT	2
59	102955	PHOTO INTERRUPTER SWITCH	2
60	031173	CONTROLLER	1
61	102901	BRACKET	1
62	124573	WALKING PLATFORM ASSEMBLY	1
.	.	124572 WALKING BOARD	1
.	.	127860 NAIL	12
.	.	110585 REPLACEMENT INSTR.	1
.	.	NOTE: THIS ASSEMBLY HAS	0
.	.	BEEN CHANGED FROM THE	0
.	.	ORIGINAL WAXED BOARD	0
63	NSP	FRAME	1
64	103261	FOOT RAIL	2
65	040156	REAR LEG ENDCAP	2
66	103461	RIGHT ENDCAP	1
67	013206	REAR ROLLER ADJ. BOLT	2
68	010206	ROLLER GUARD	2
69	103277	REAR ROLLER	1
70	016028	WRENCH CLIP	1
71	045010	ALLEN WRENCH	1
72	103447	LEFT ENDCAP	1
73	040201	SIDE RAIL ENDCAP	1
74	013575	SIDE RAIL BOLT	1
75	014094	FORMED WASHER	1
76	014086	FLAT WASHER	1
77	054016	E-CLIP	4
78	013586	HOOD SCREW	4
79	103319	SAFETY COVER	1
80	103993	SPACER	1
81	102641	WIRE HARNESS	1
82	NLA	MOTOR HOOD W/DECAL	1
83	013423	SMALL SCREW	4
.	.	NON-ILLUSTRATED PARTS:	0
A	101061	HOOD DECAL	1
B	102089	FRAME DECAL	2
C	103621	OWNERS MANUAL	1
#	.	*--THESE ARE ESTIMATED	0
#	.	COSTS!!!!!	0
	103620	LITERATURE PACKET	1
	.	103621 OWNERS MANUAL	1
	.	104332 CONSUMER NOTICE	1
	.	054013 CLOTHES CLIP	1

KEY NUMBER	PART NUMBER	DESCRIPTION	QUANTITY
	.	112589 PULSE EARCLIP	1
	.	017103 LOCK KNOB	1
	.	014050 LOCK KNOB WASHER	1
	.	075047 HARDWARE KIT	1
	.	016028 TOOL CLAMP	1
	.	045010 ALLEN WRENCH	1
	.	013575 SIDE RAIL BOLT	1
	.	014094 FORMED WASHER	1
	.	014086 SIDE RAIL WASHER	1