EXPLODED DRAWING—Model No. PF410020

Rev. 9/92

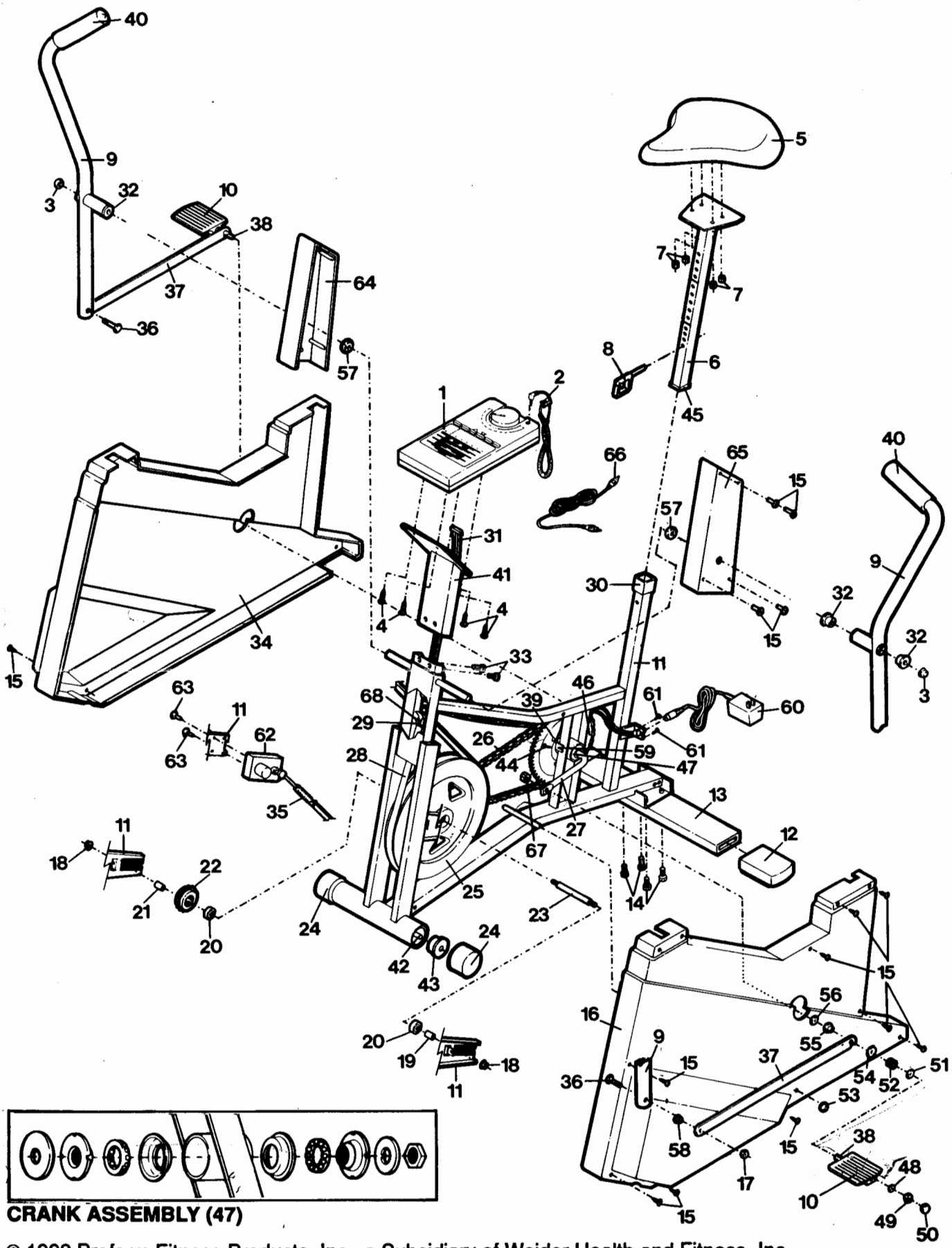

CRANK ASSEMBLY (47)

© 1992 Proform Fitness Products, Inc., a Subsidiary of Weider Health and Fitness, Inc.