EXPLODED DRAWING—Model No. PFCCEL39013
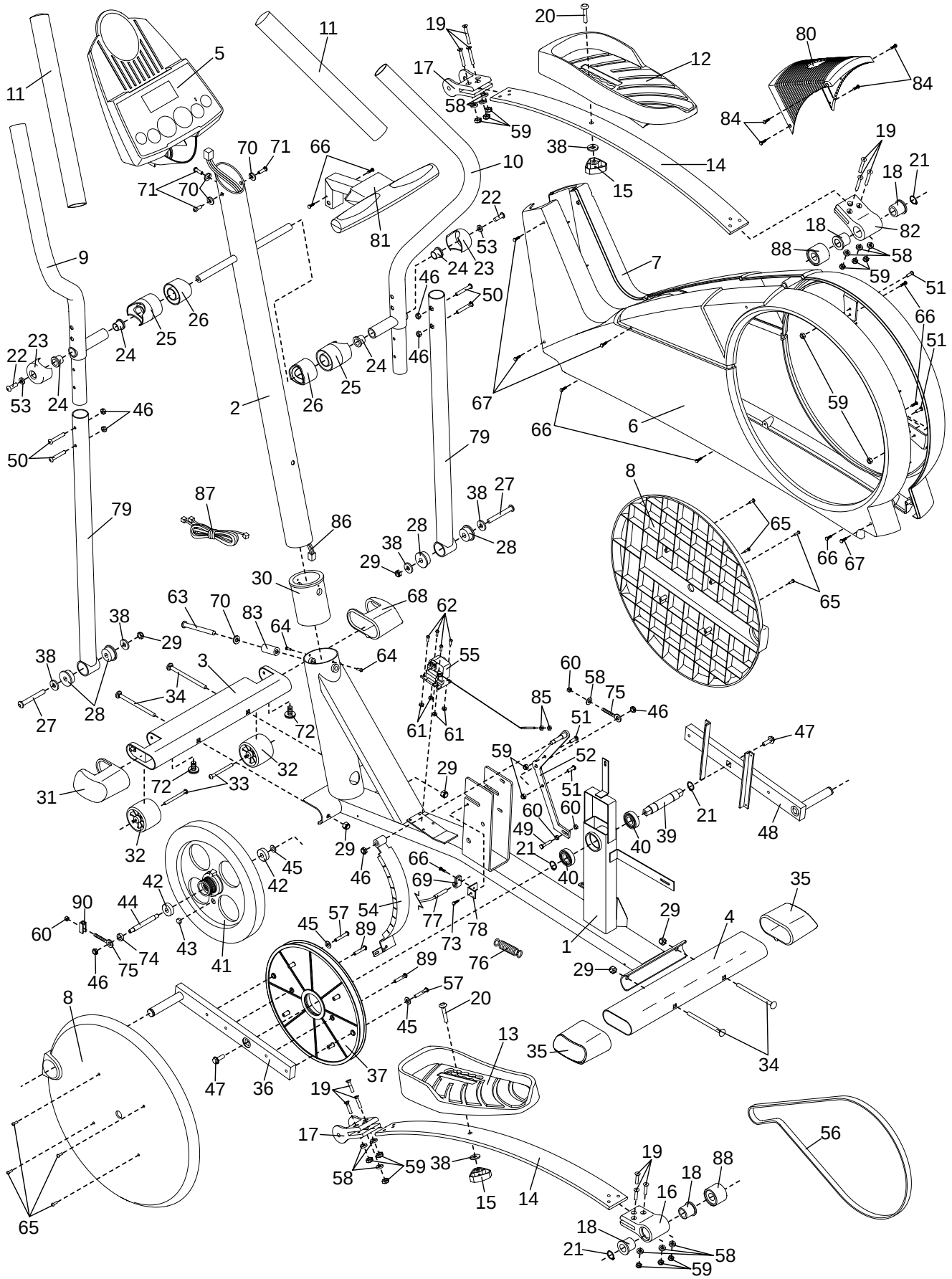
R0602A