EXPLODED DRAWING—Model No. PFCCEX17910
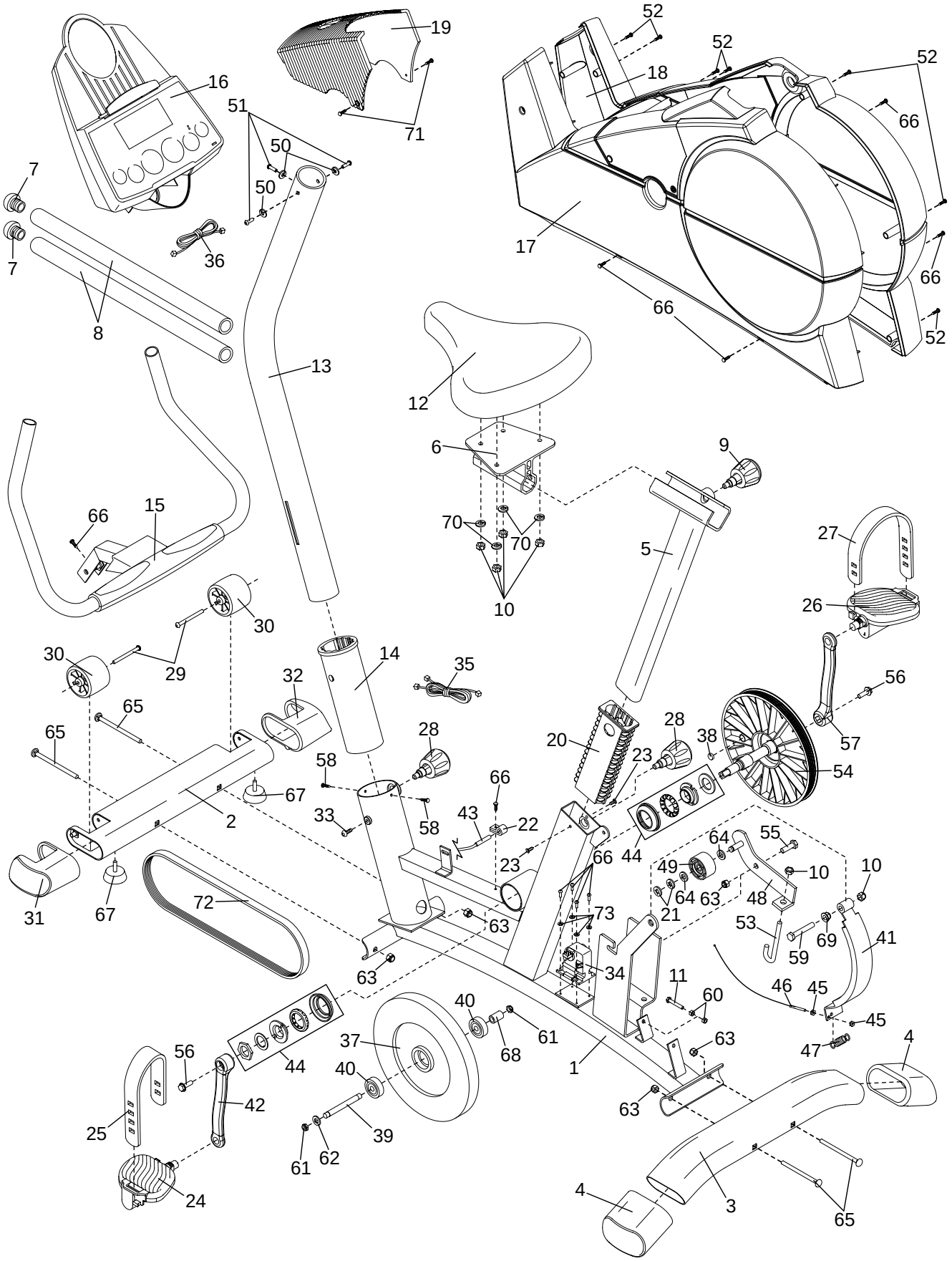
R0802A