EXPLODED DRAWING—Model No. PFEL39031
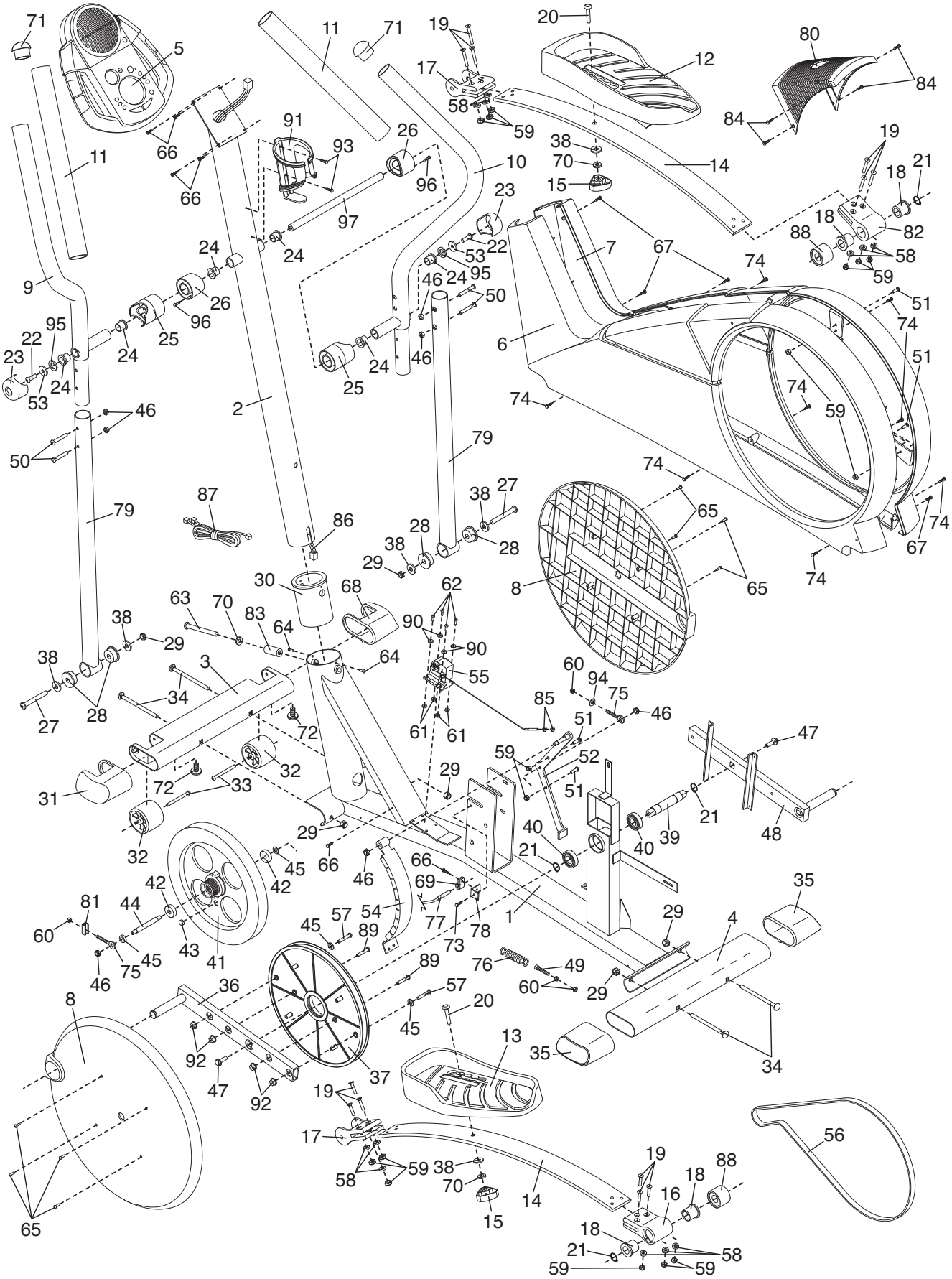
R0804A