EXPLODED DRAWING A—Model No. PFEL64907.0

R0108A

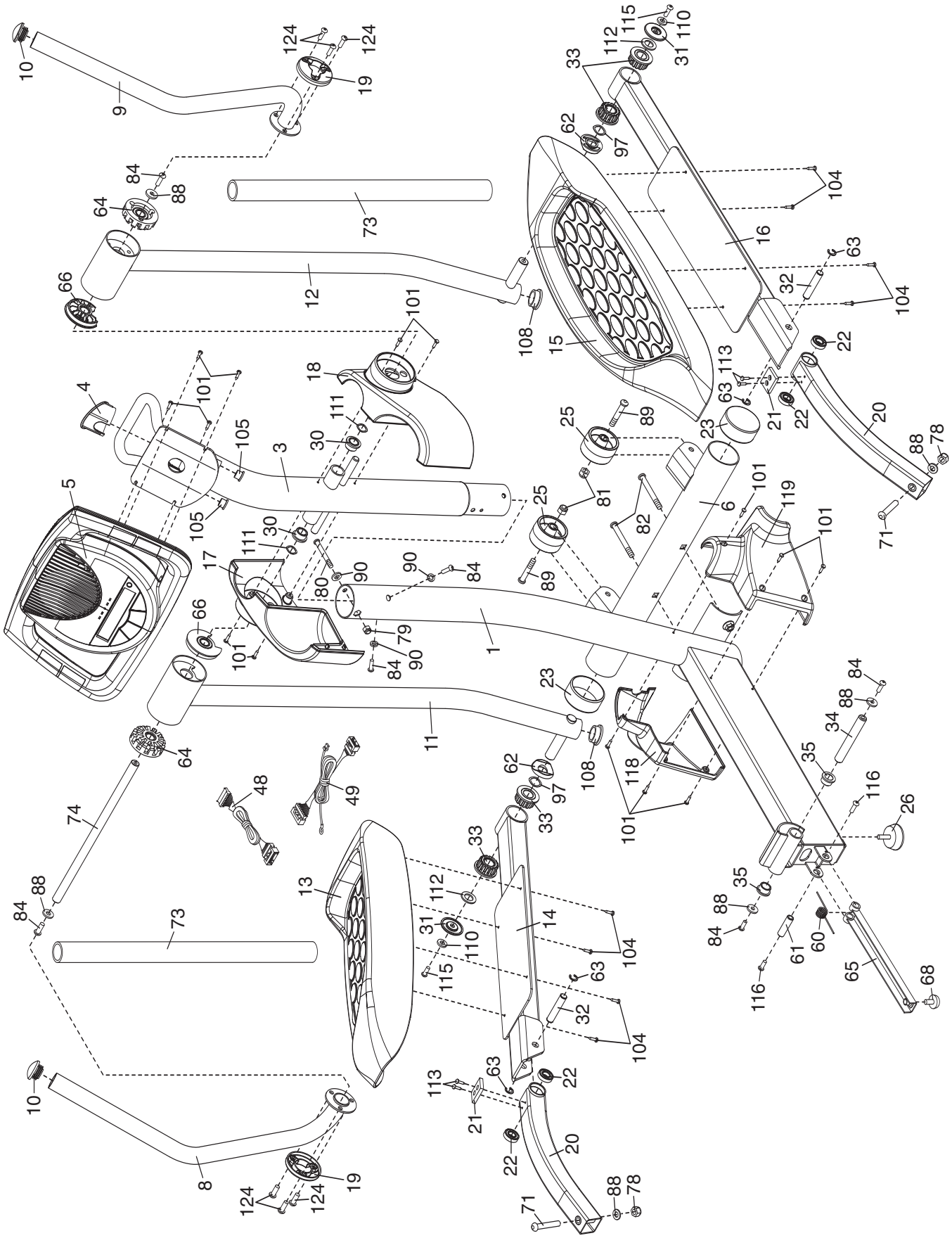

EXPLODED DRAWING B—Model No. PFEL64907.0
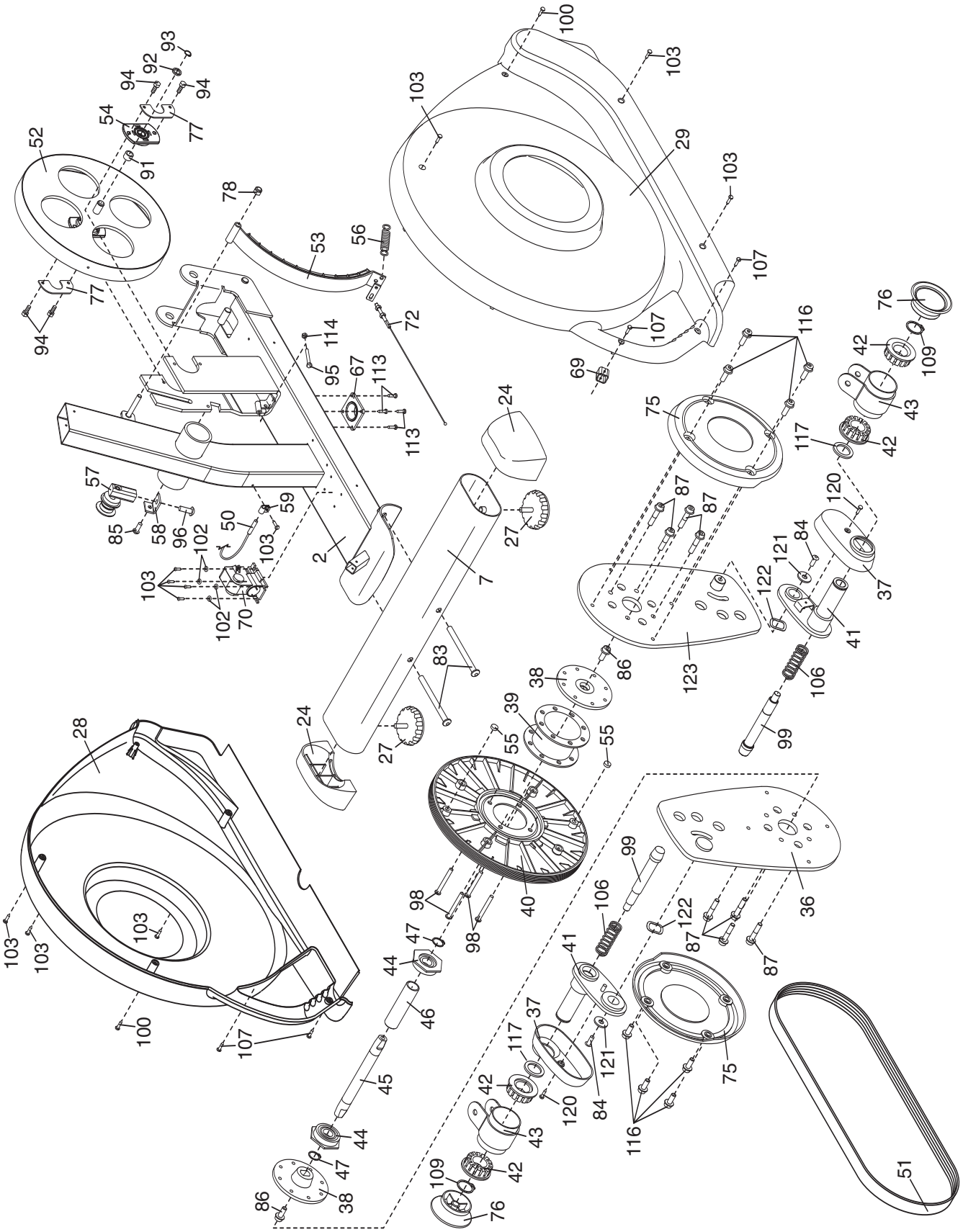
R0108A