EXPLODED DRAWING—Model No. PFEVEL29010
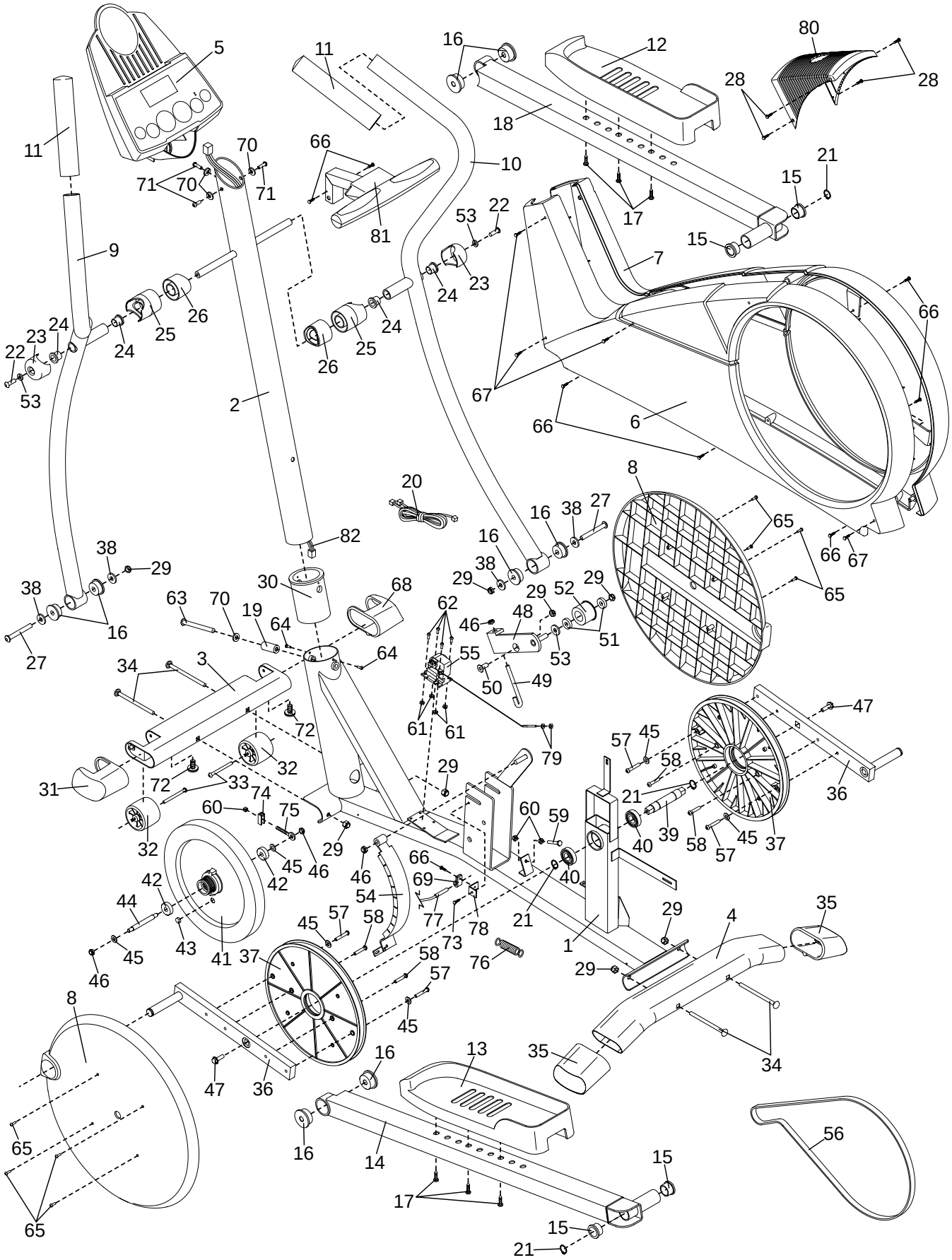
R0202A