EXPLODED DRAWING—Model No. PFEVEL59830
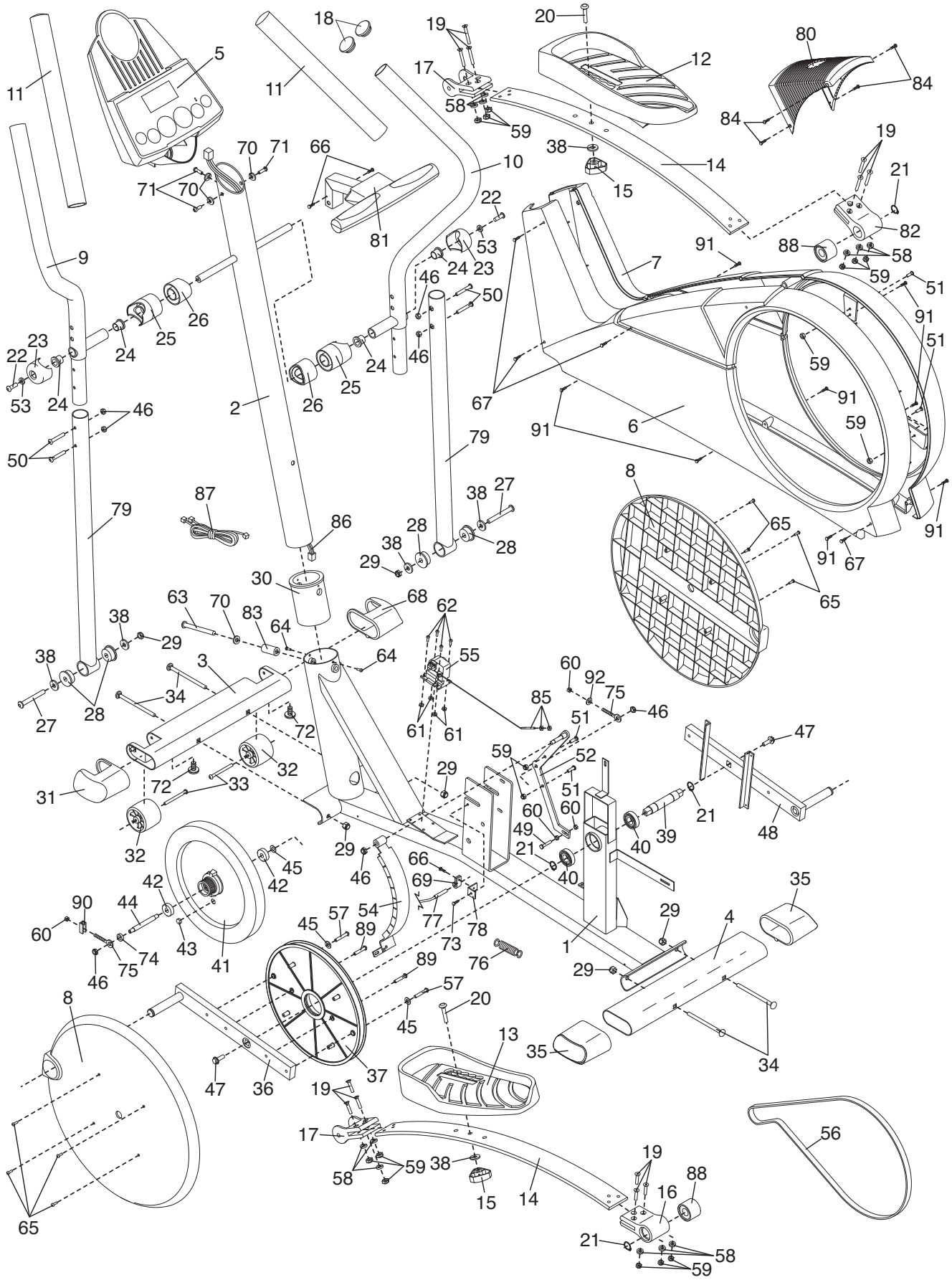
R1003A