EXPLODED DRAWING—Model No. PFEVEL59831
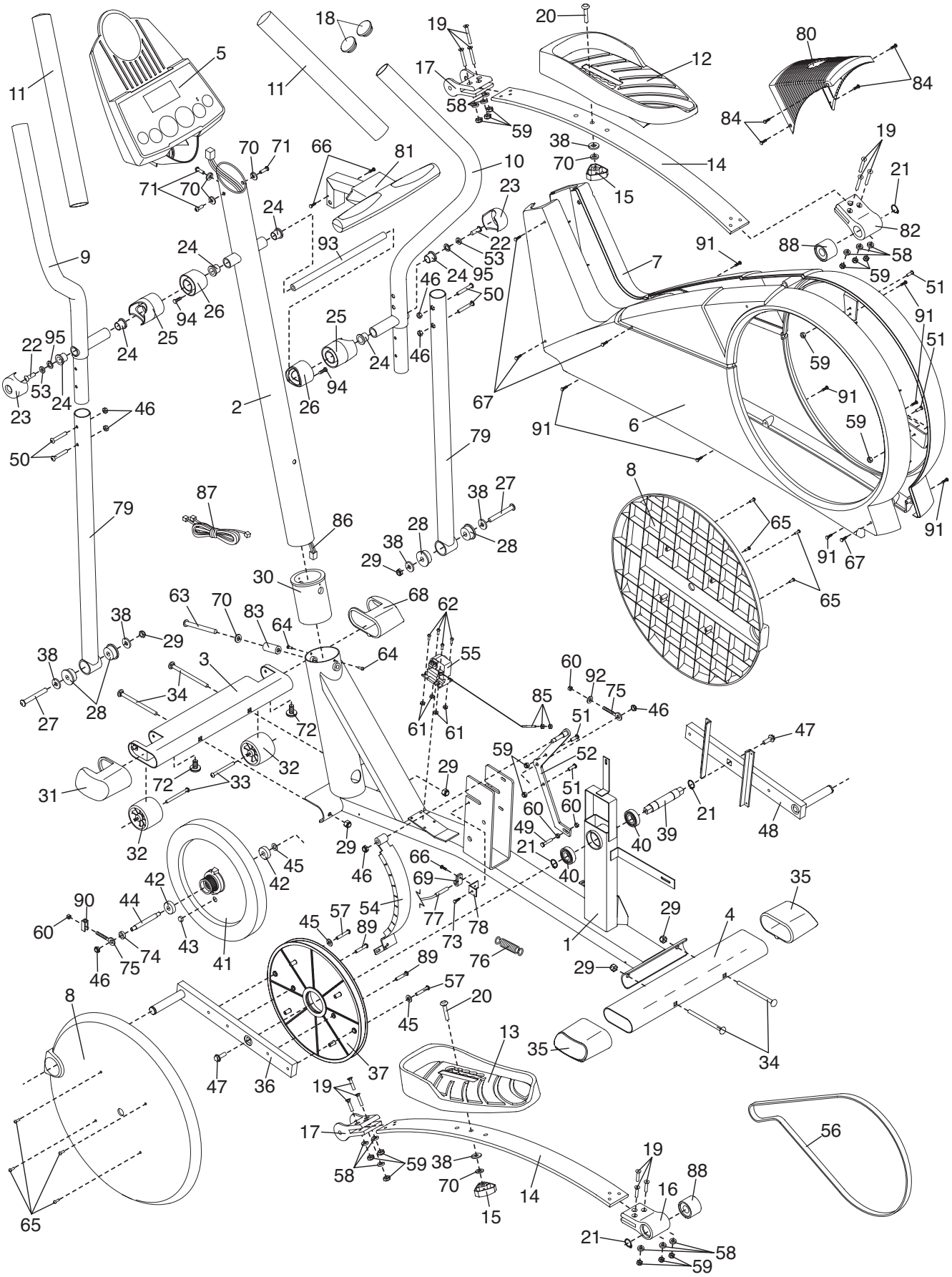
R0704A