EXPLODED DRAWING—Model No. PFEVEL59940
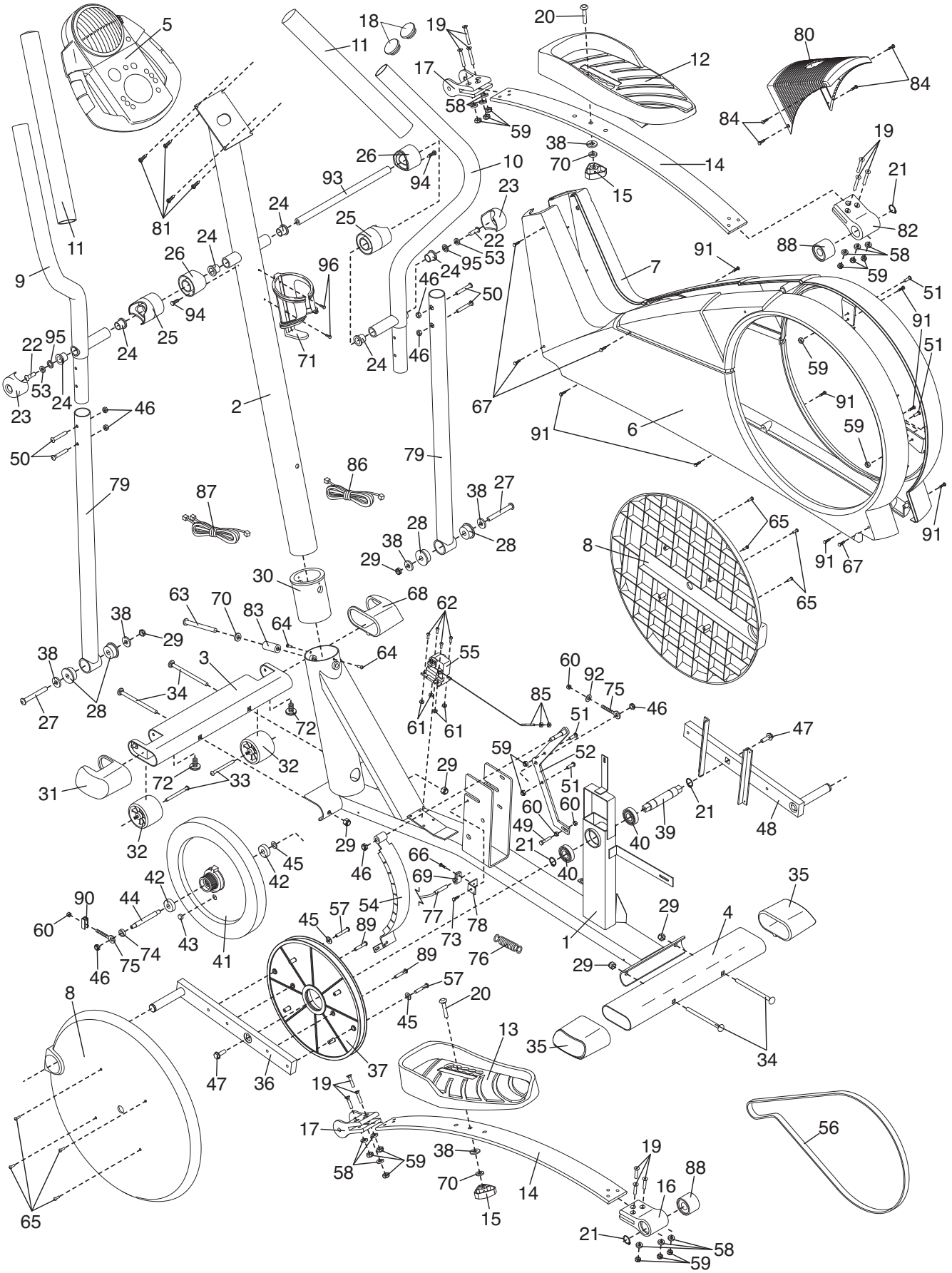
R0704A