EXPLODED DRAWING—Model No. PFEVEX29832
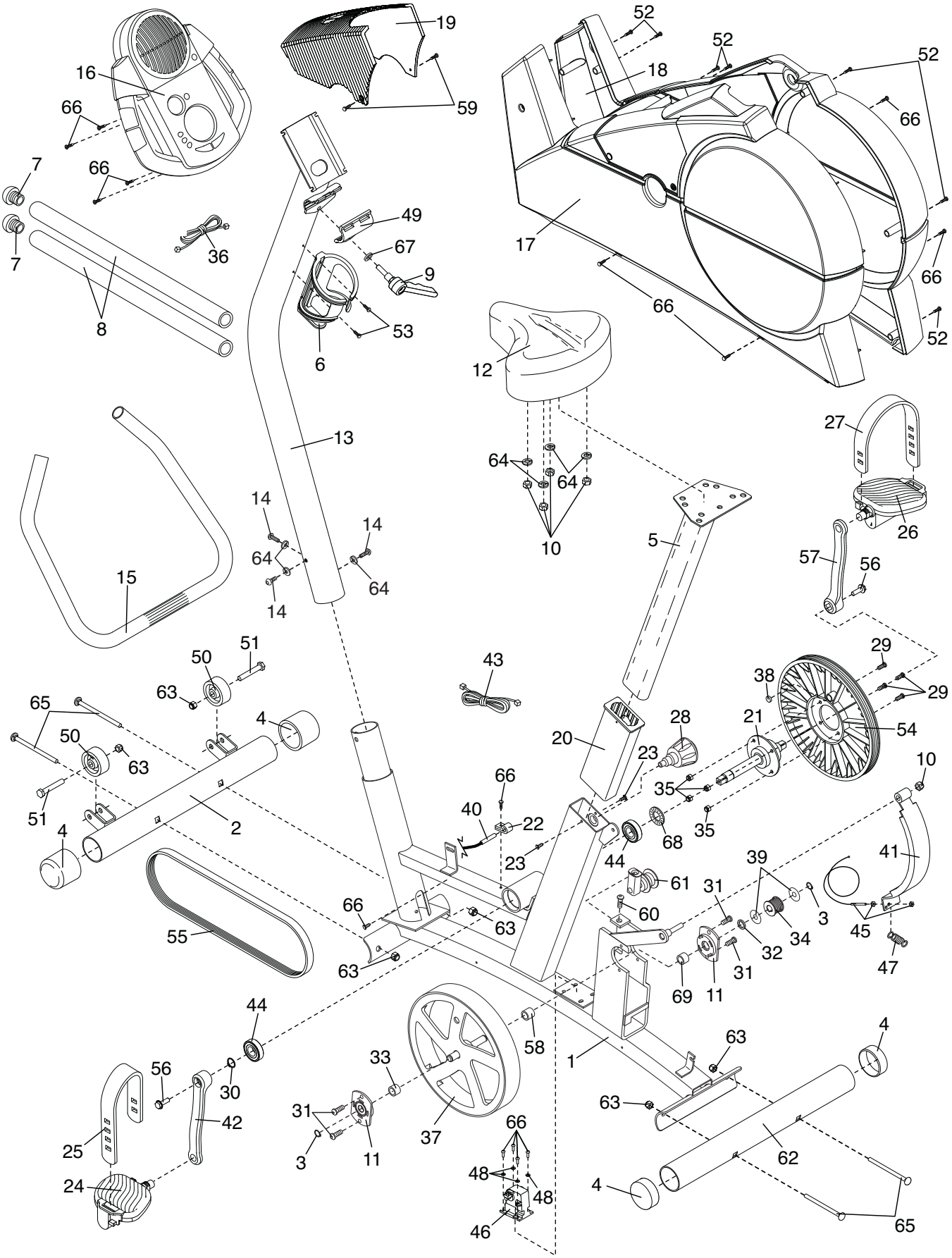
R0505A