# EXPLODED DRAWING
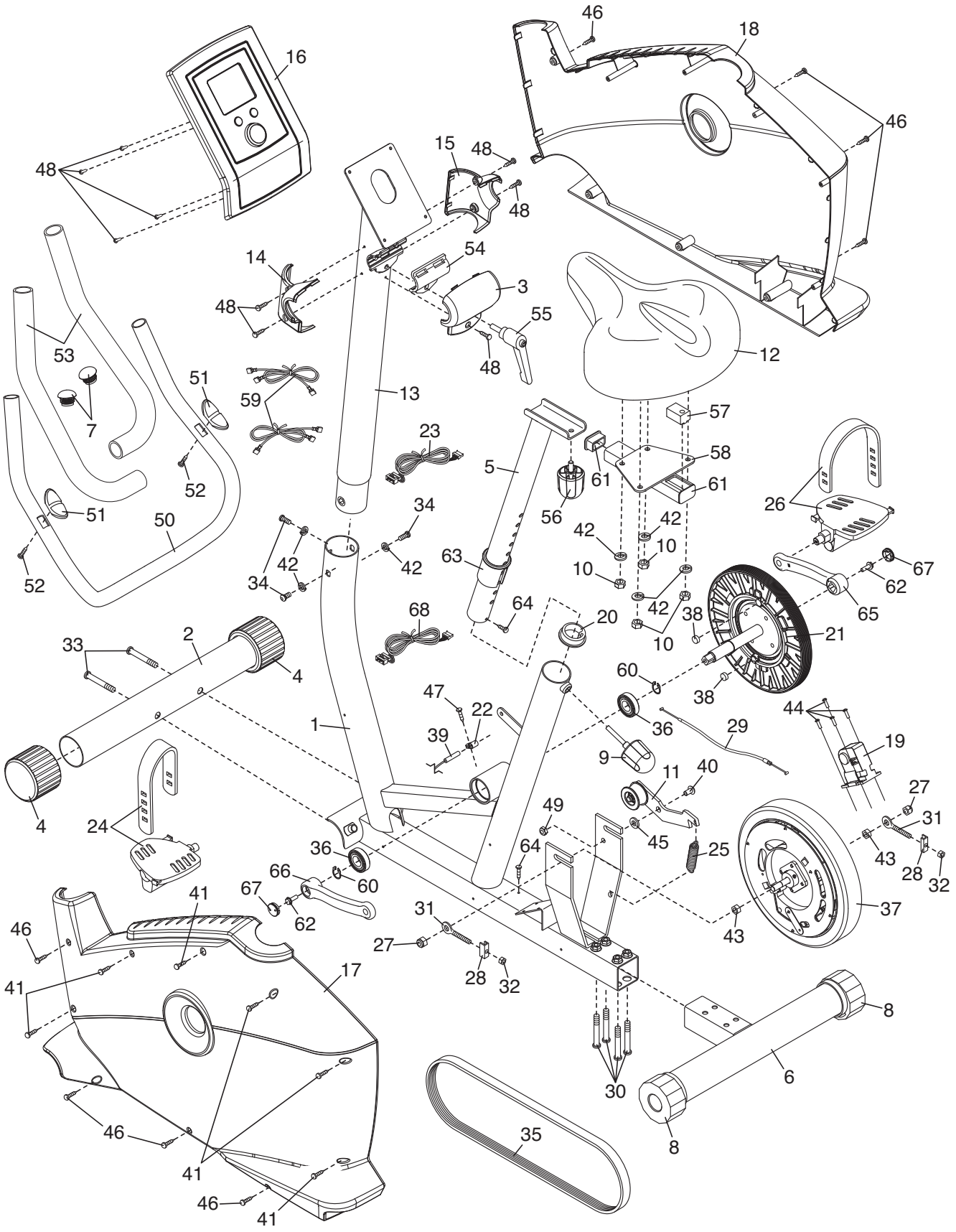
Model No. PFEVEX73108.1 R1110A