EXPLODED DRAWING—Model No. PFEVEX74010.0
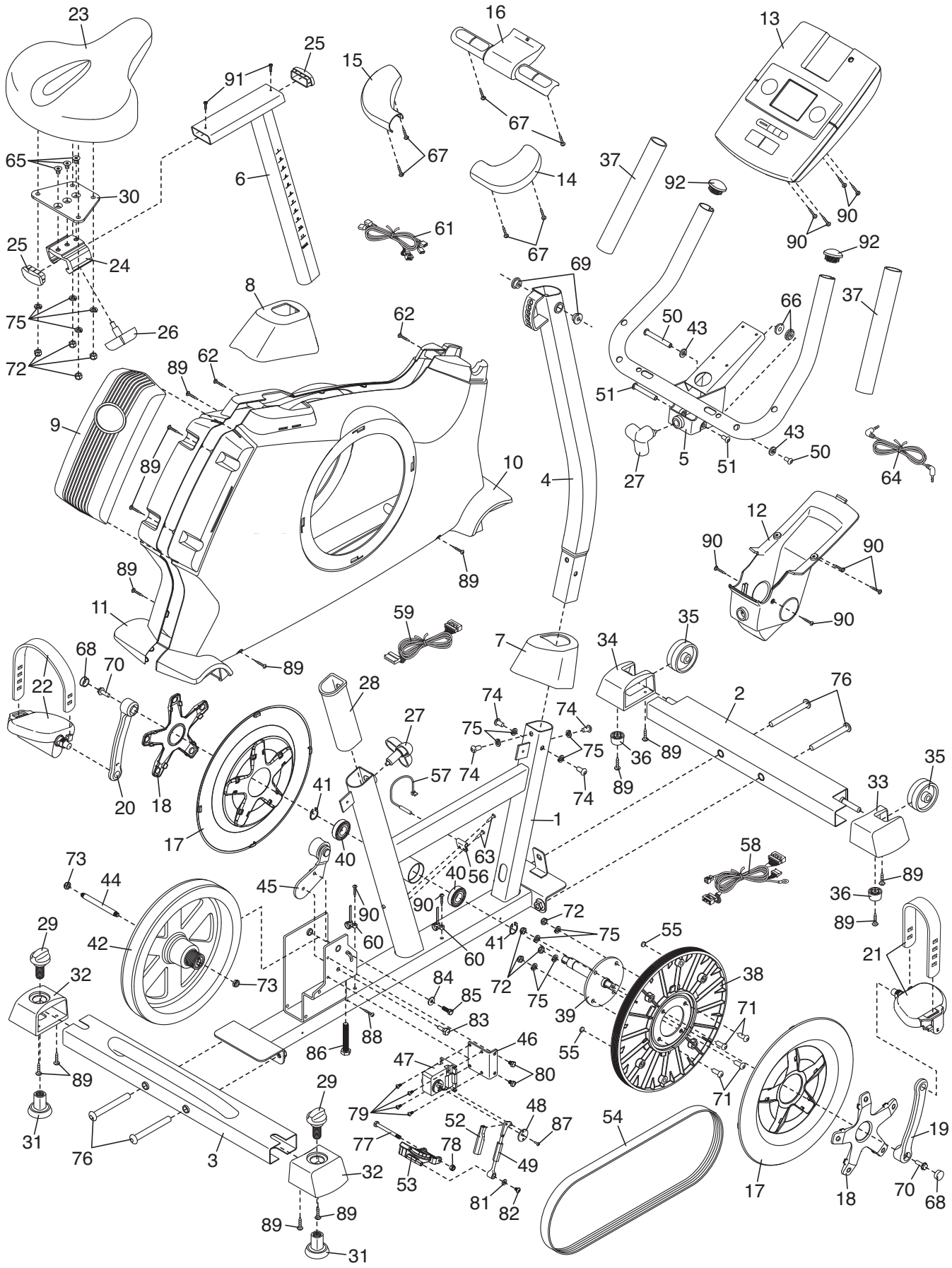
R0910A