EXPLODED DRAWING
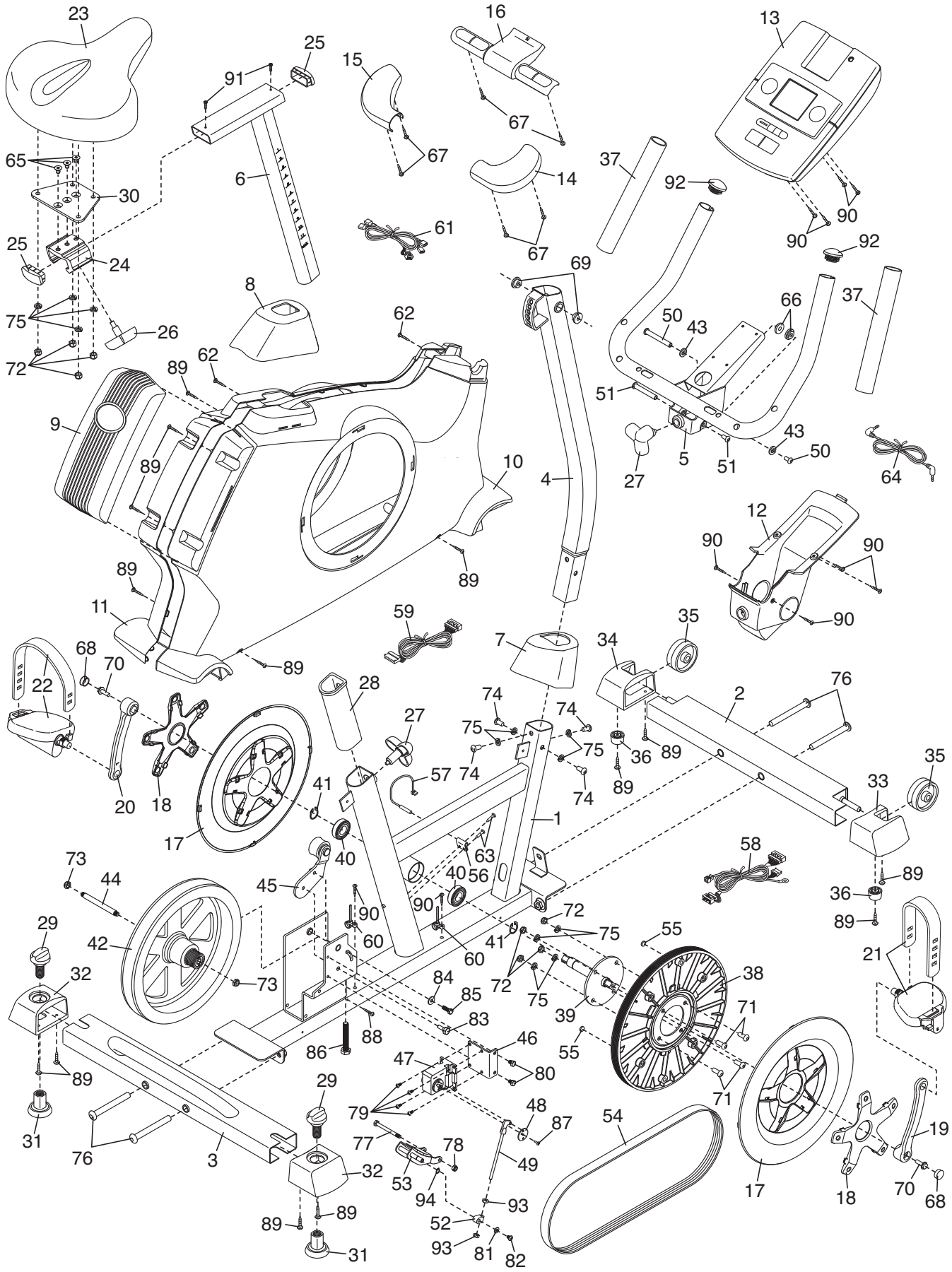
Model No. PFEVEX74010.1 R1110A