EXPLODED DRAWING
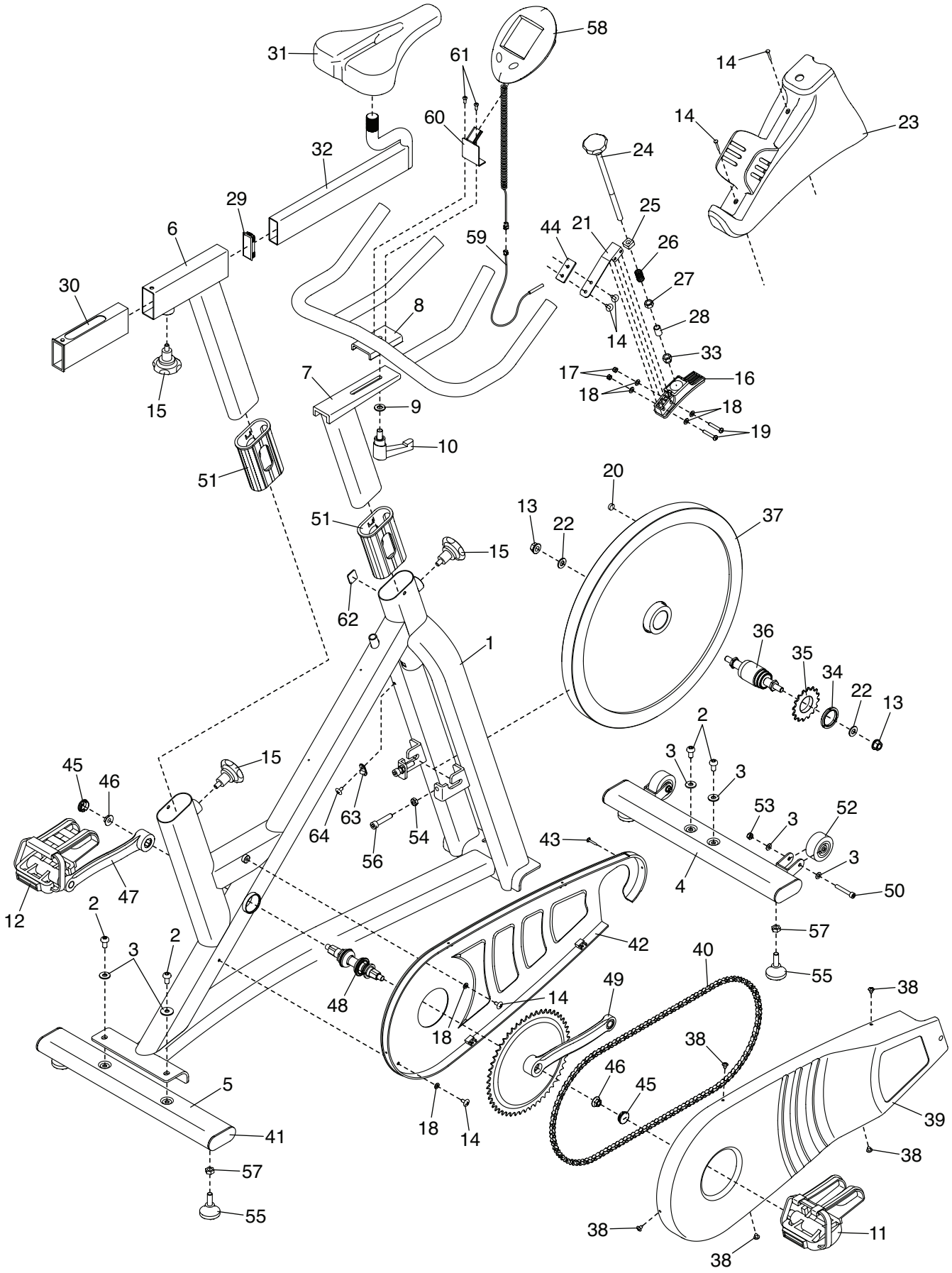
Model No. PFEVEX74915.0 R0415A