EXPLODED DRAWING A

Model No. PFEVEX77918.0 R0119A

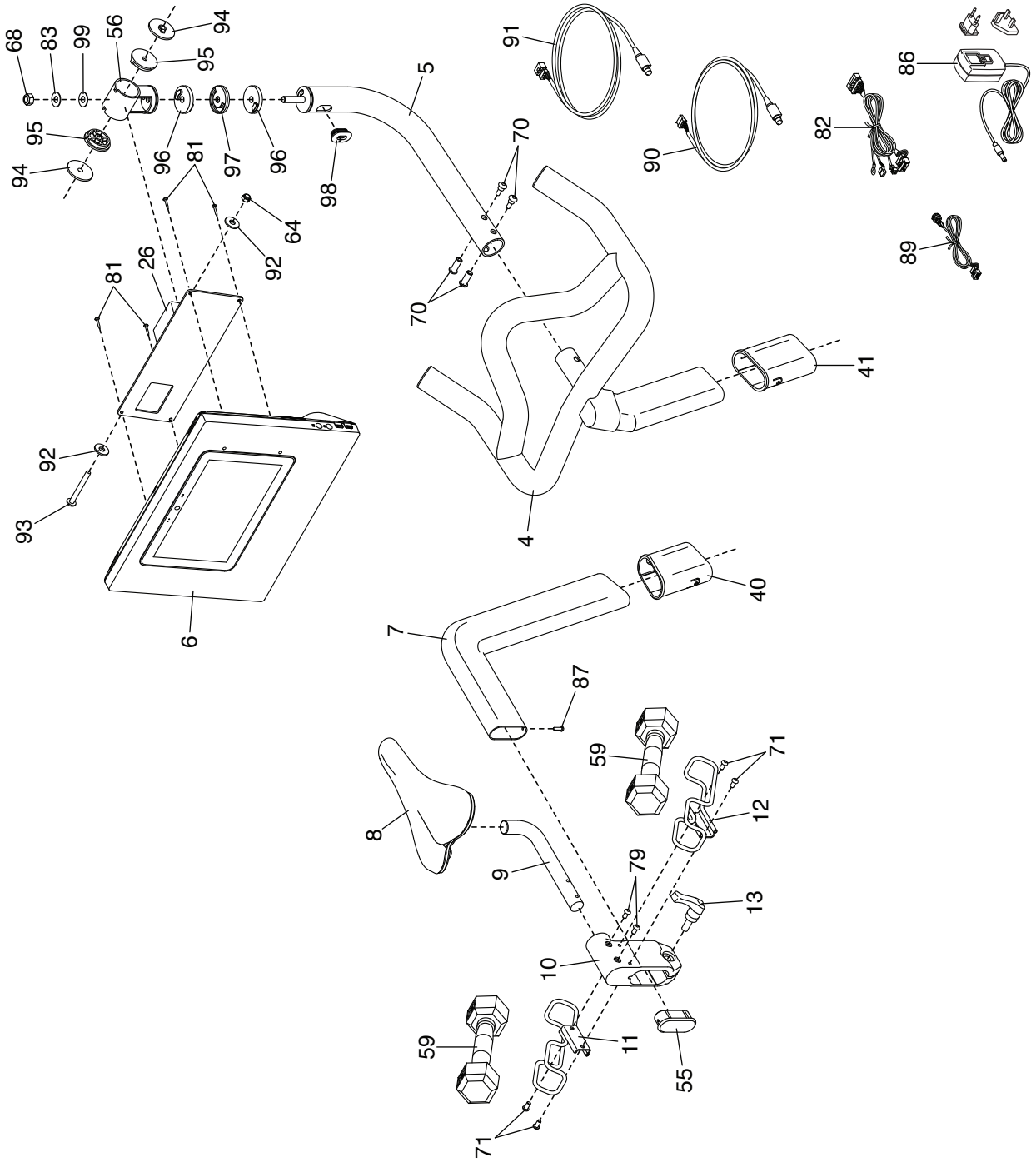

EXPLODED DRAWING B
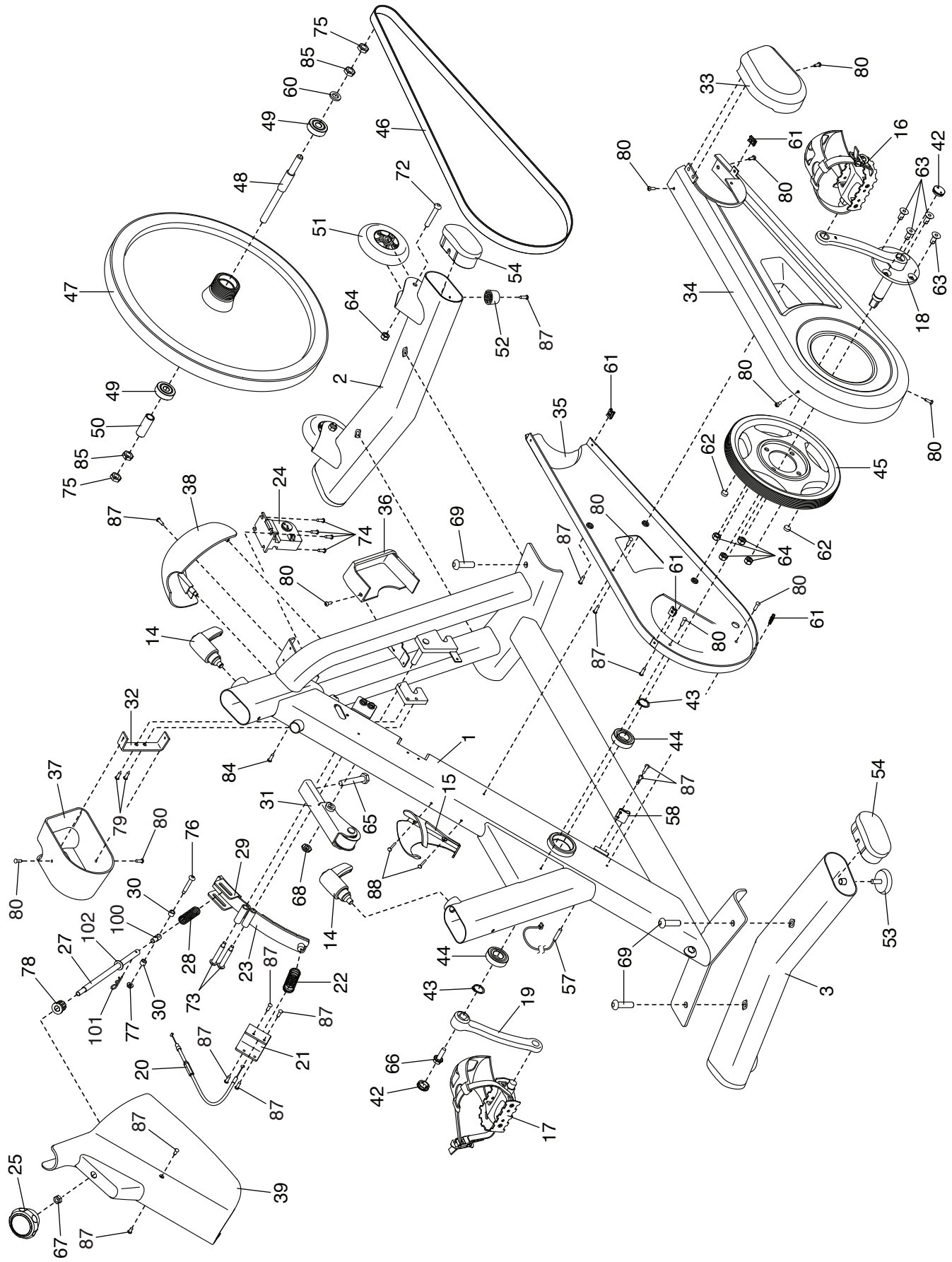
Model No. PFEVEX77918.0 R0119A