EXPLODED DRAWING—Model No. PFEVEX87910
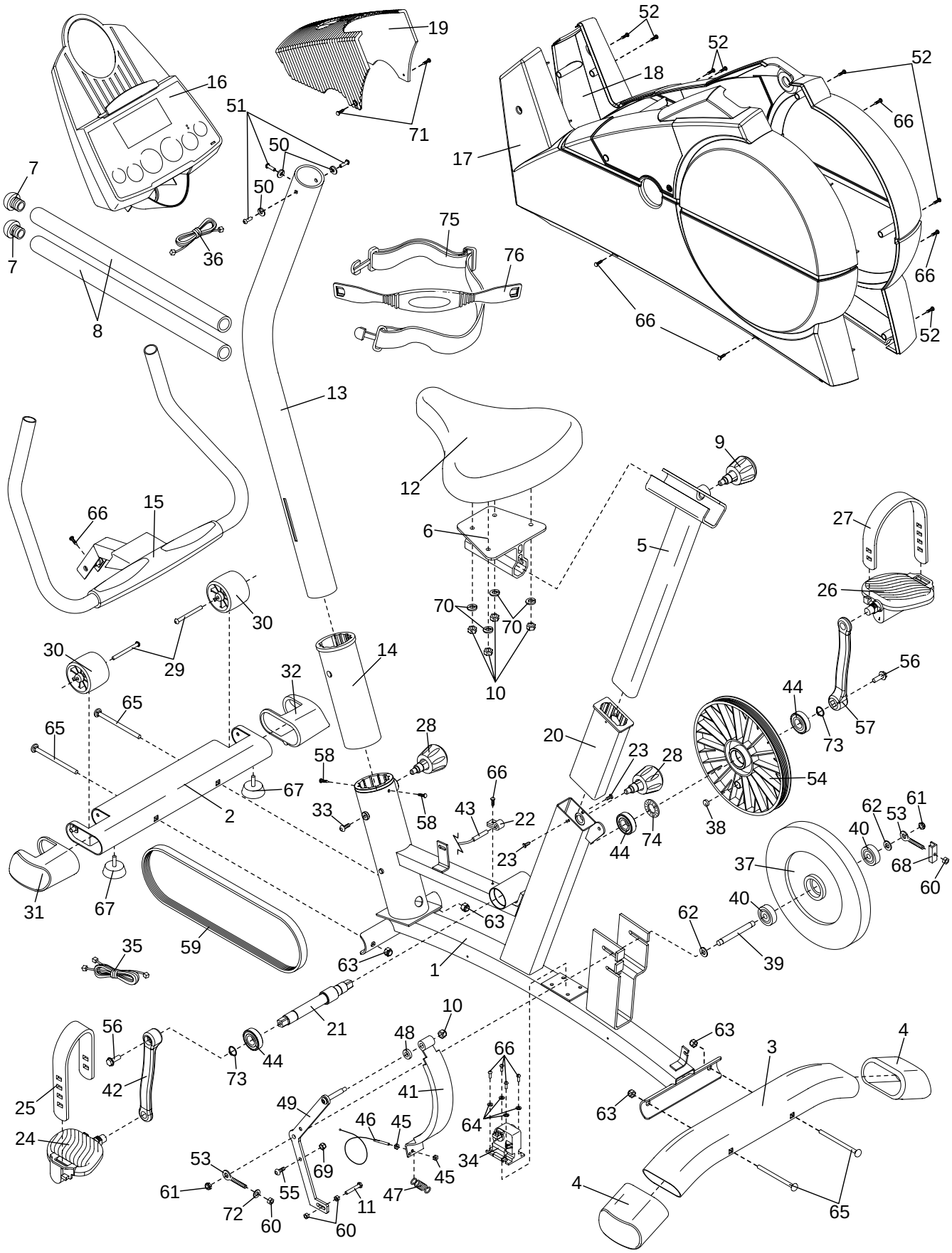
R0602A