EXPLODED DRAWING—Model No. PFEVEX92407.0
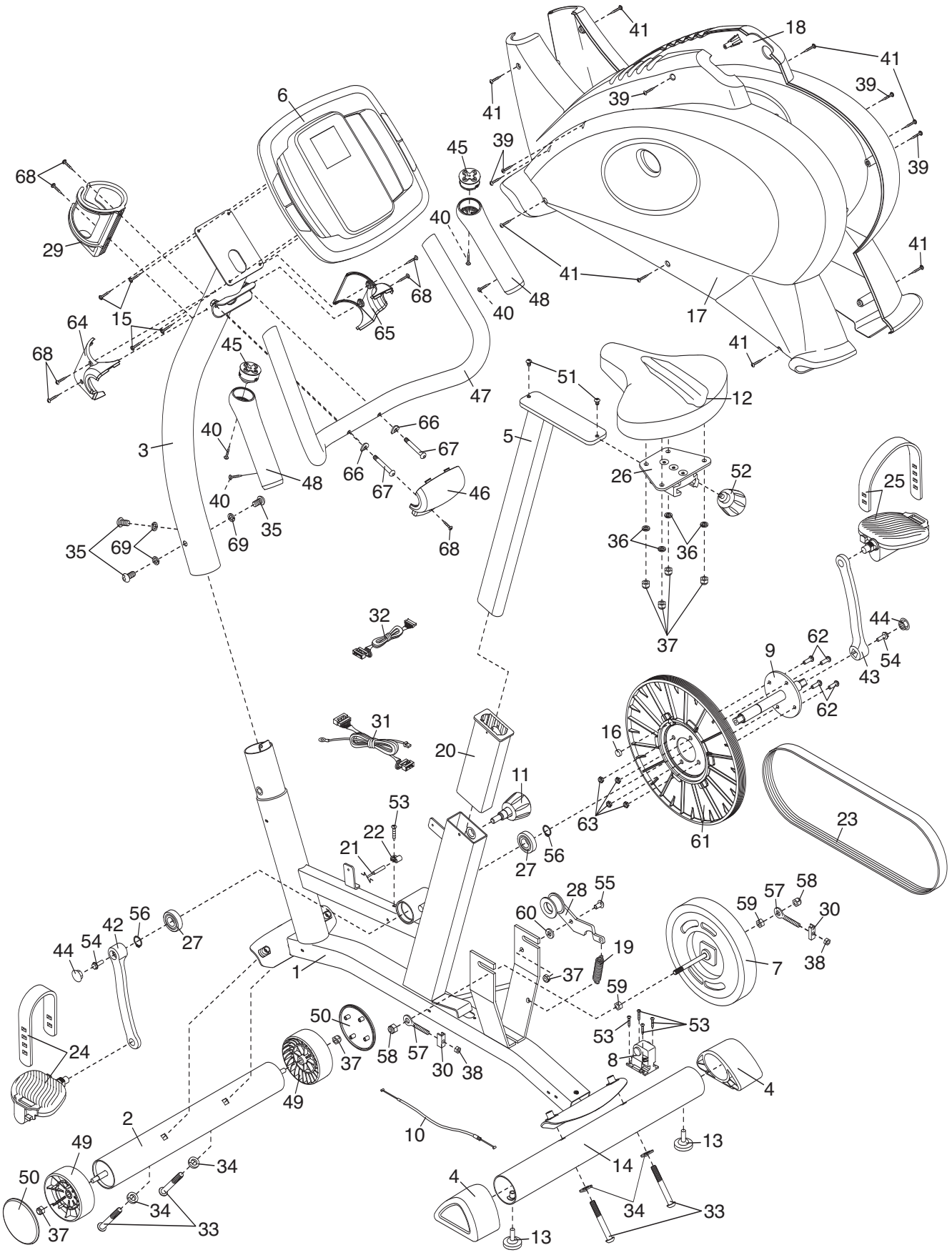
R1207A