EXPLODED DRAWING—Model No. PFEX17931
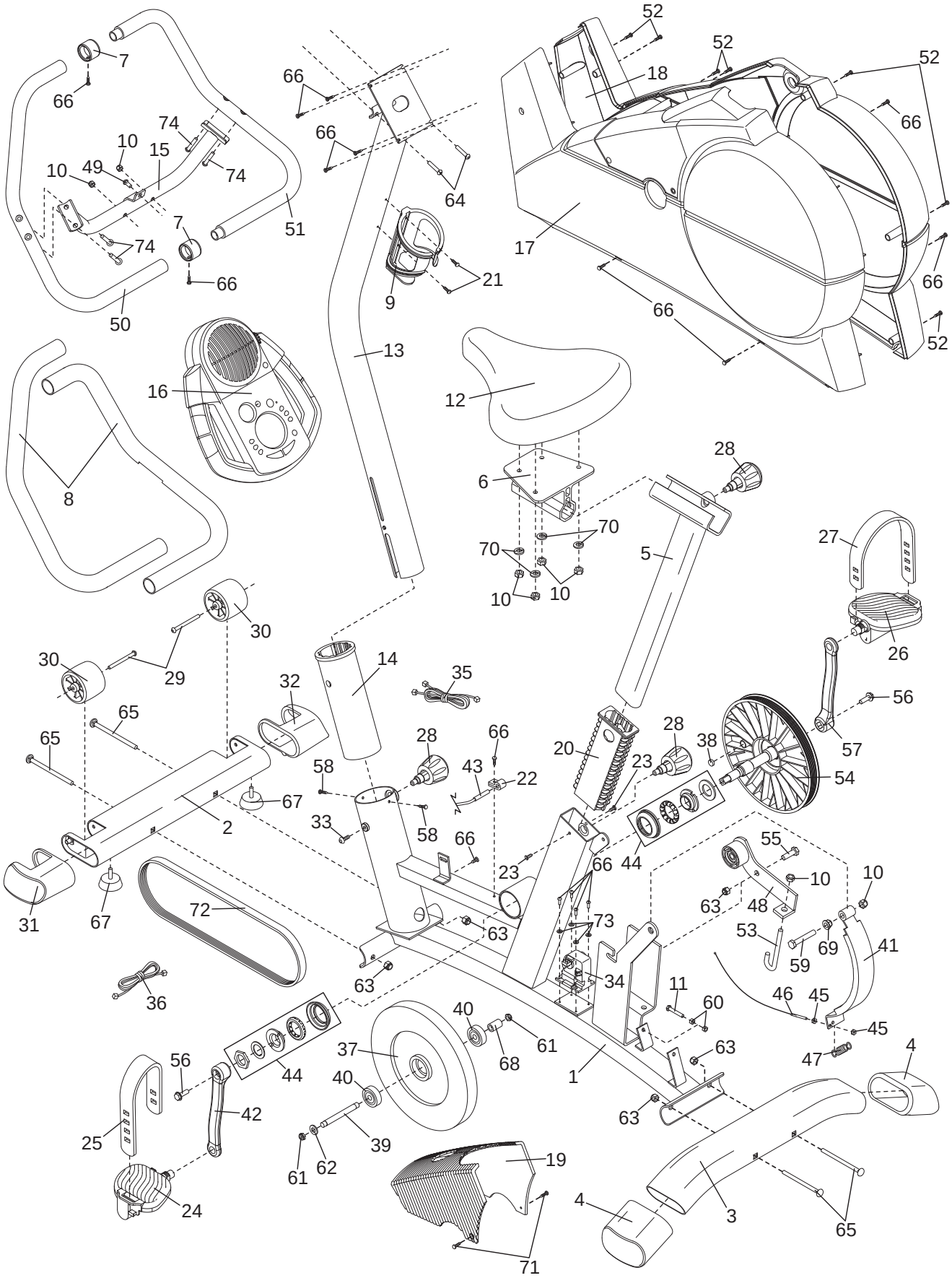
R0603A