EXPLODED DRAWING—Model No. PFEX17932
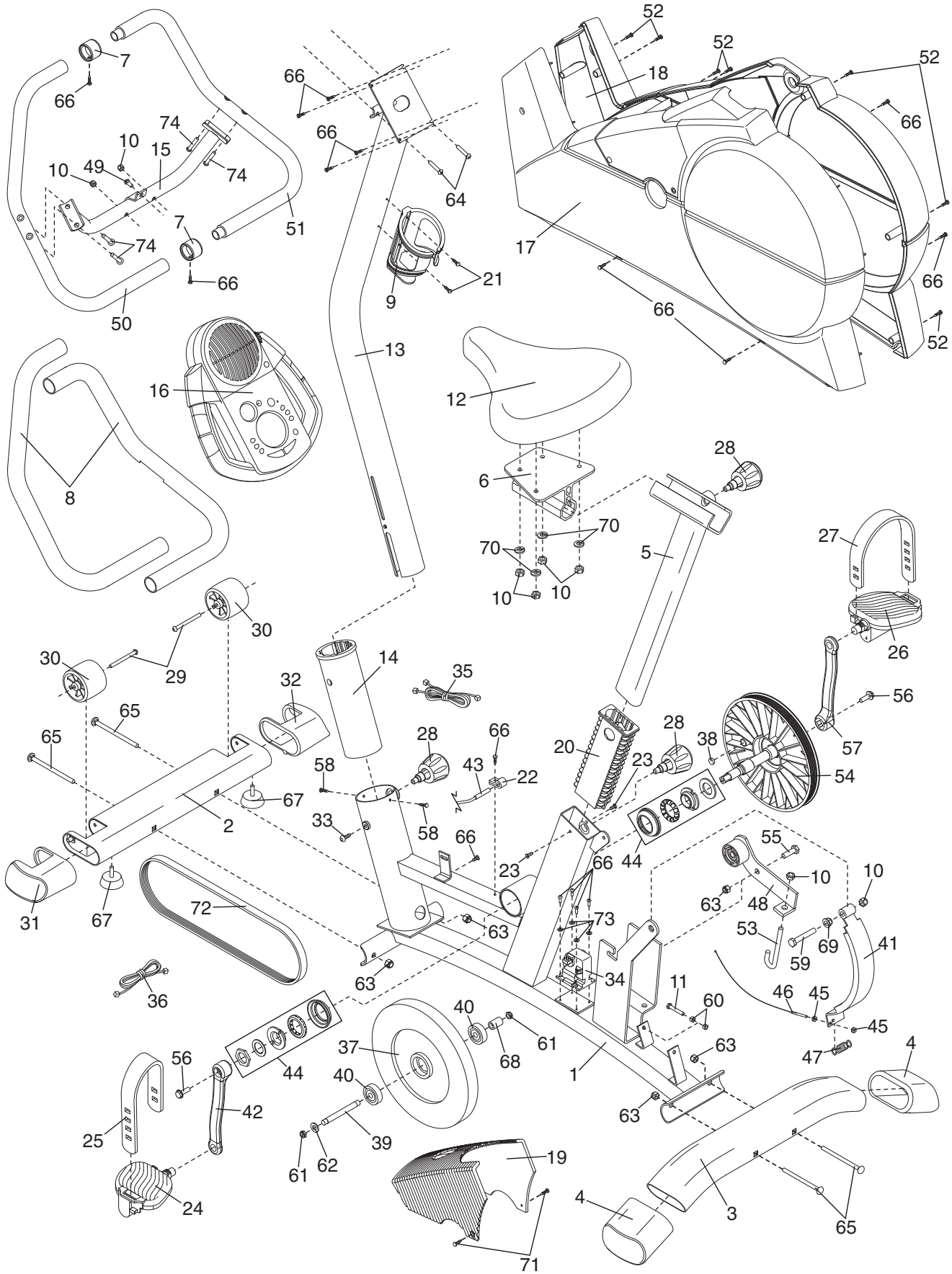
R0604A