EXPLODED DRAWING—Model No. PFEX20020
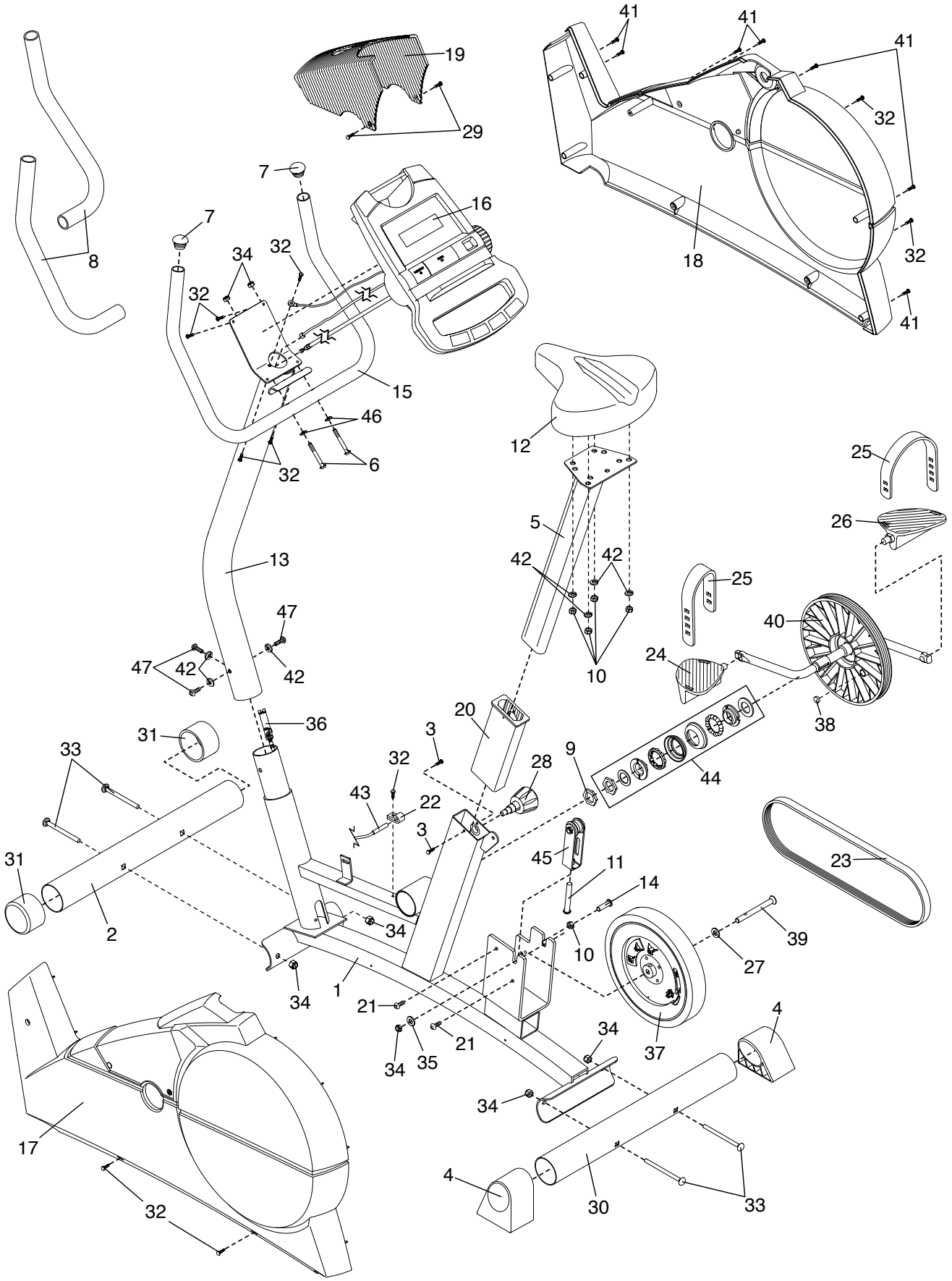
R0802A