EXPLODED DRAWING—Model No. PFEX38490
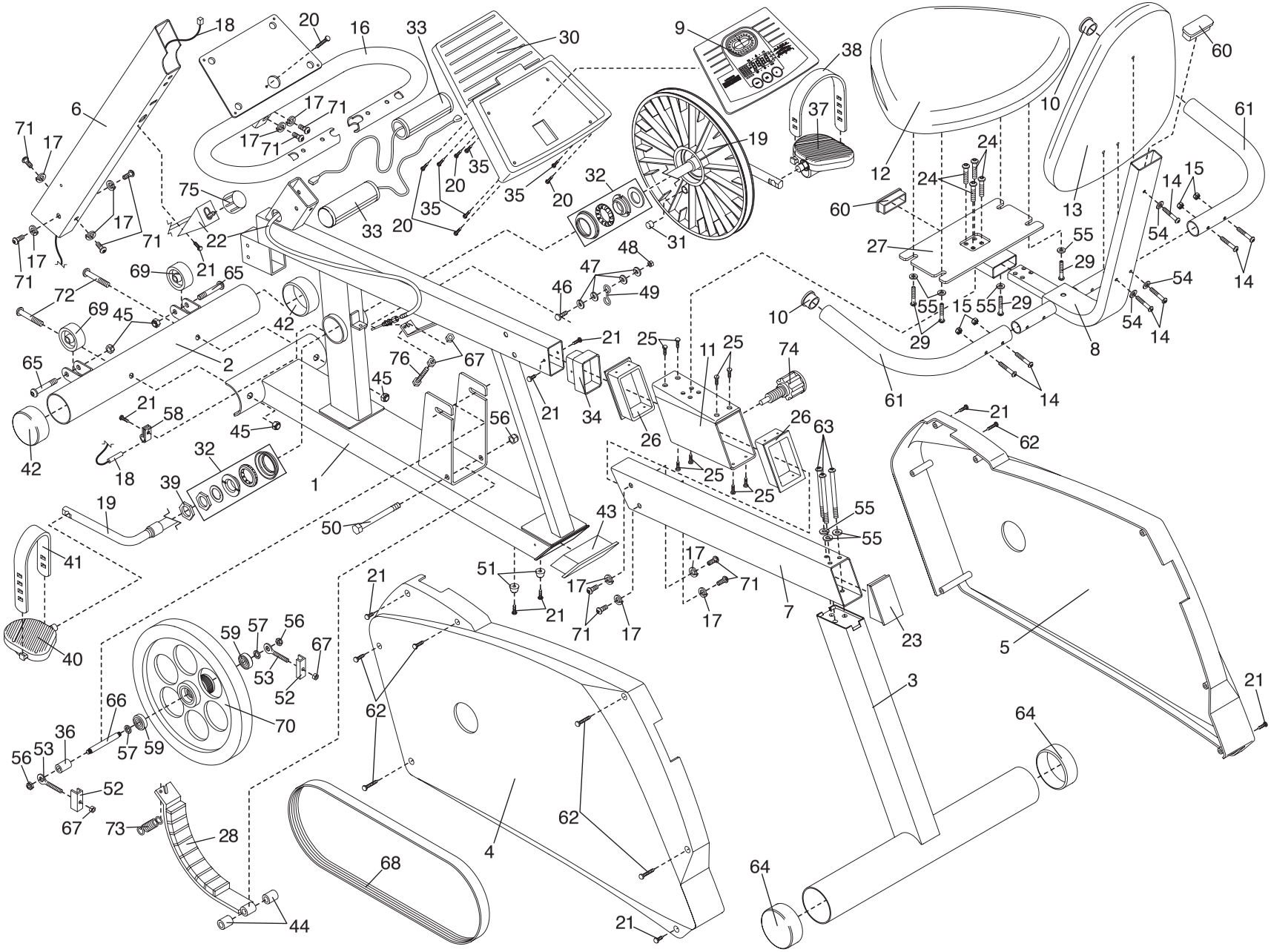
R1000A