EXPLODED DRAWING—Model No. PFEX38491
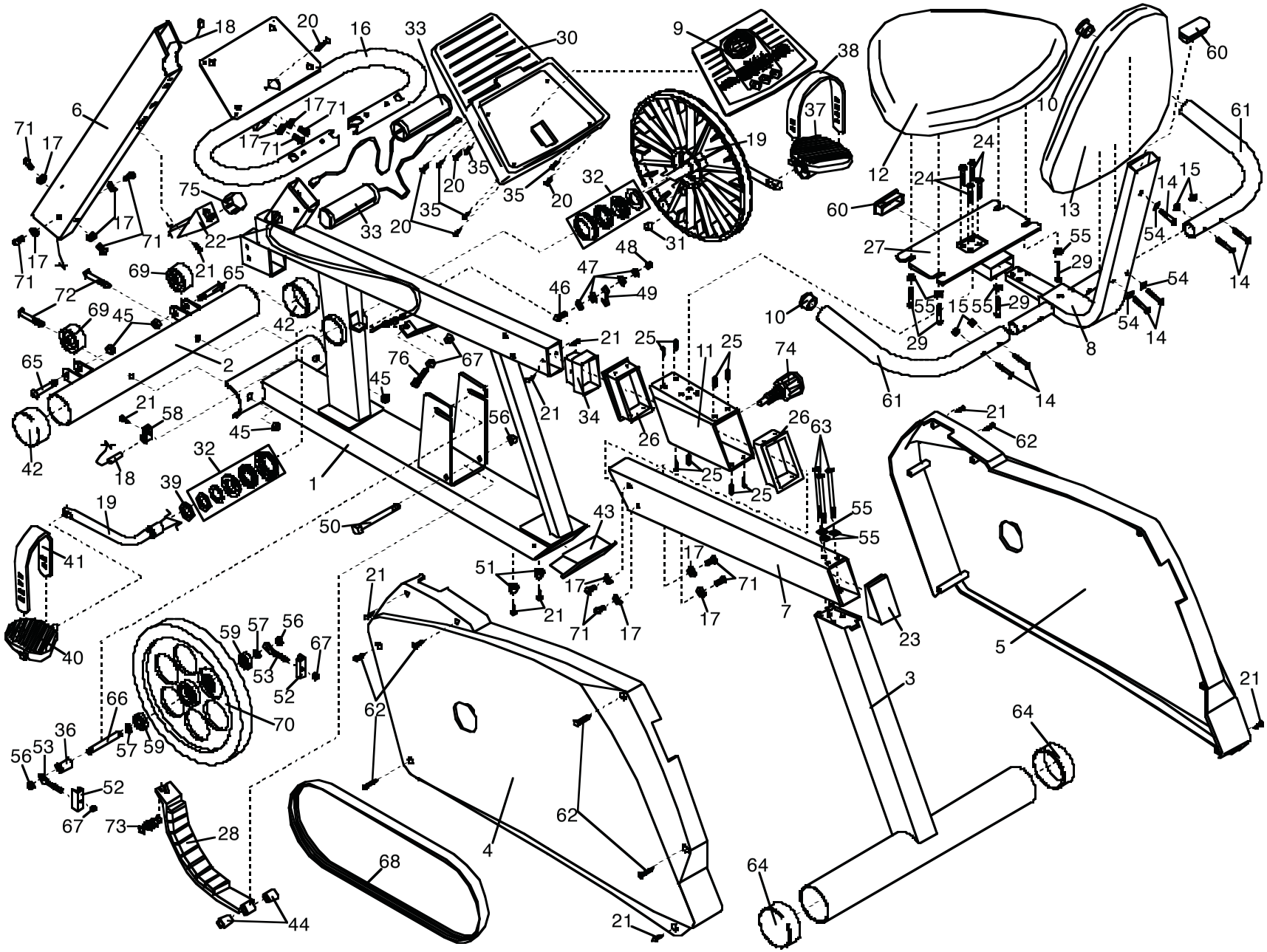
R1000A