EXPLODED DRAWING—Model No. PFEX44177.3
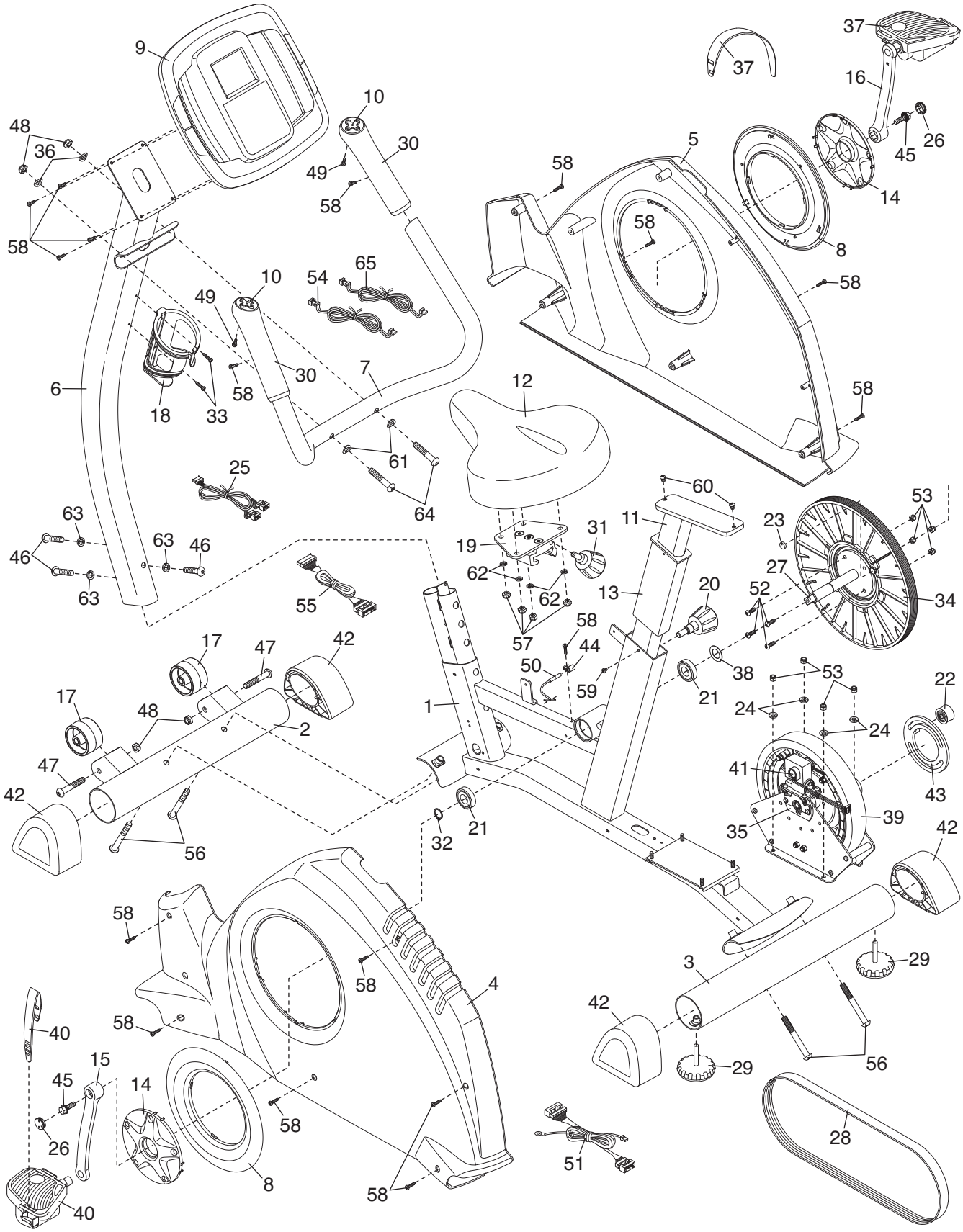
R0808A