EXPLODED DRAWING
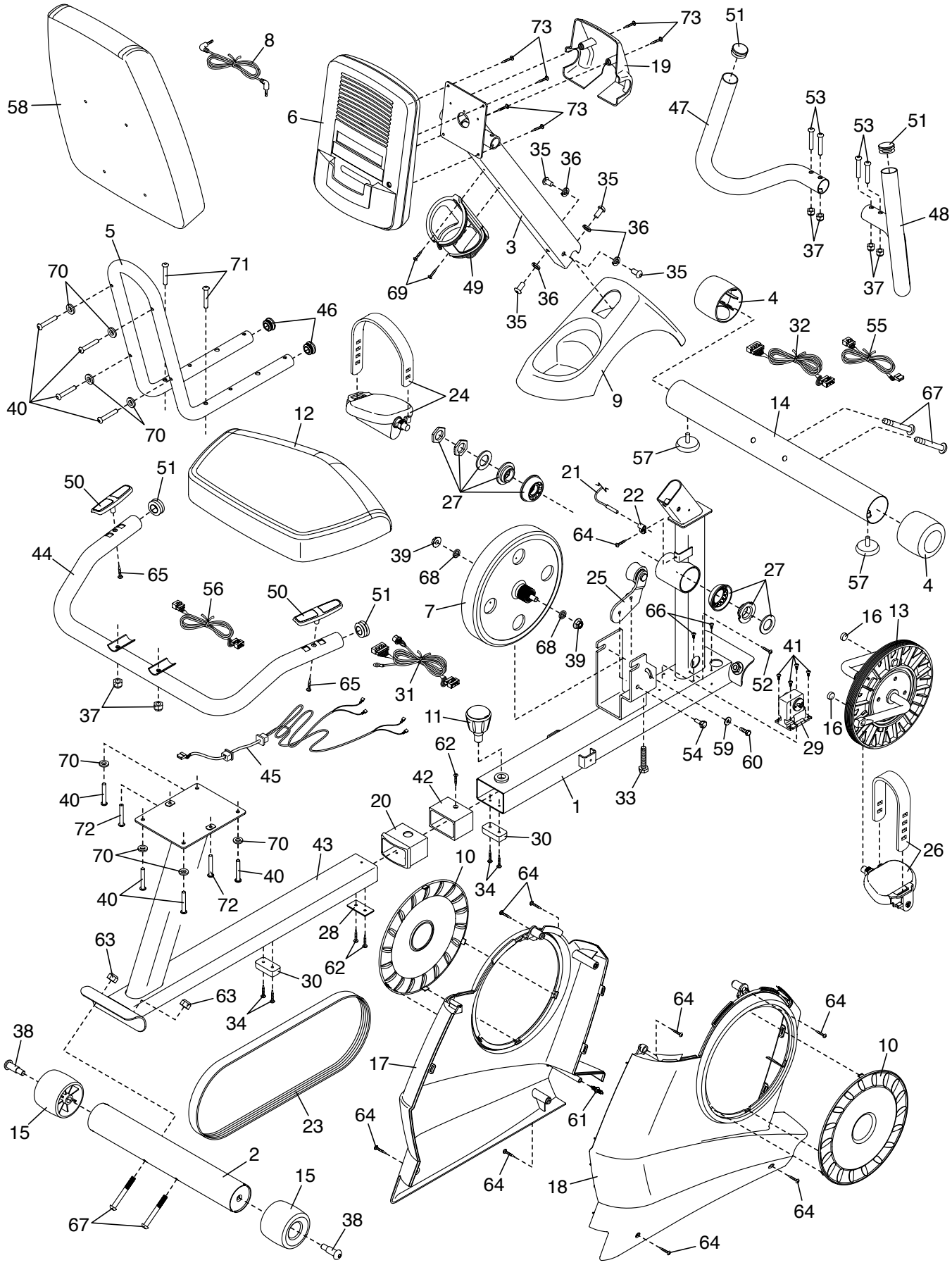
Model No. PFEX72411.2 R0812A