EXPLODED DRAWING A

Model No. PFRW66014.0 R0714A

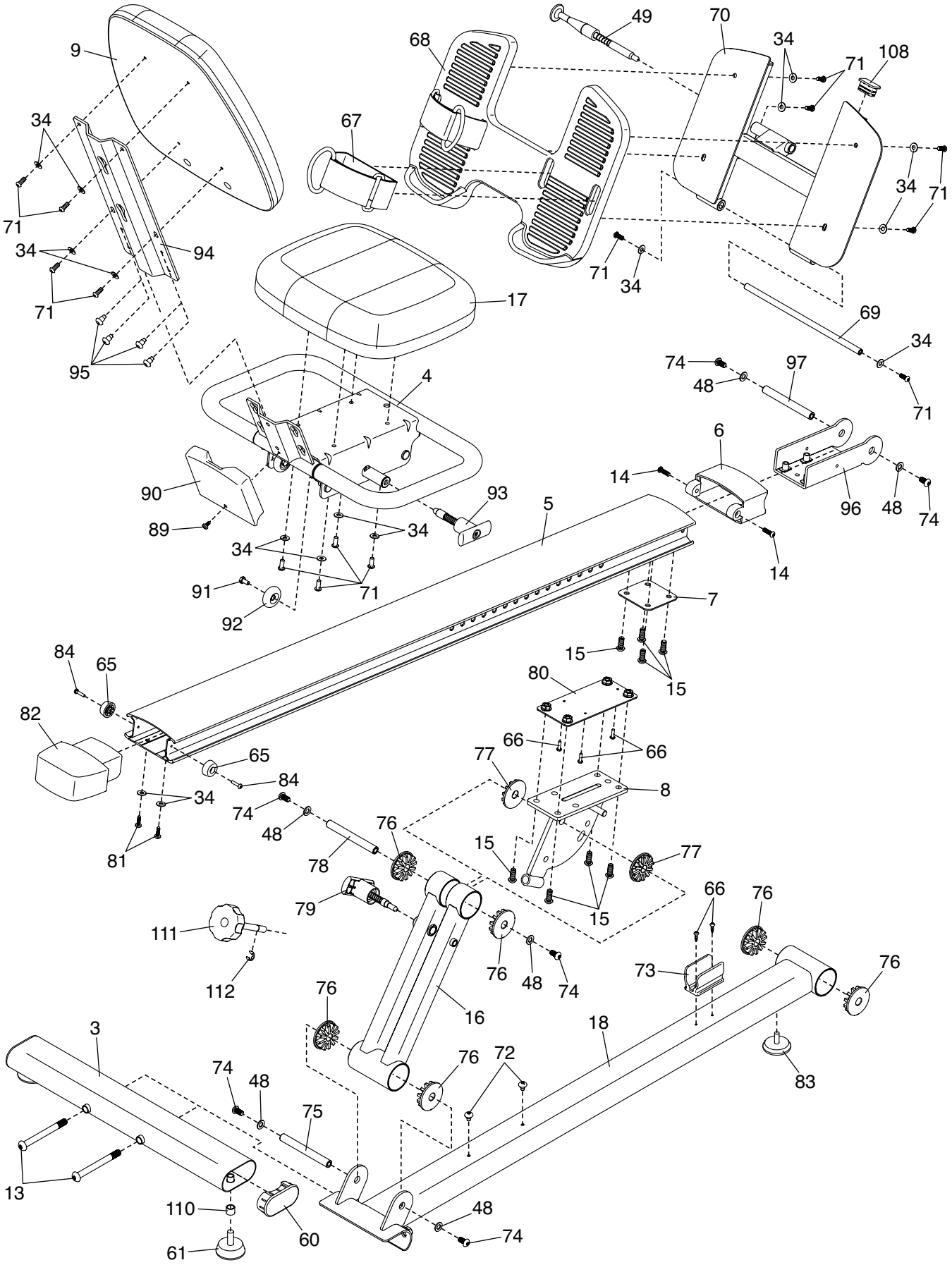

EXPLODED DRAWING B
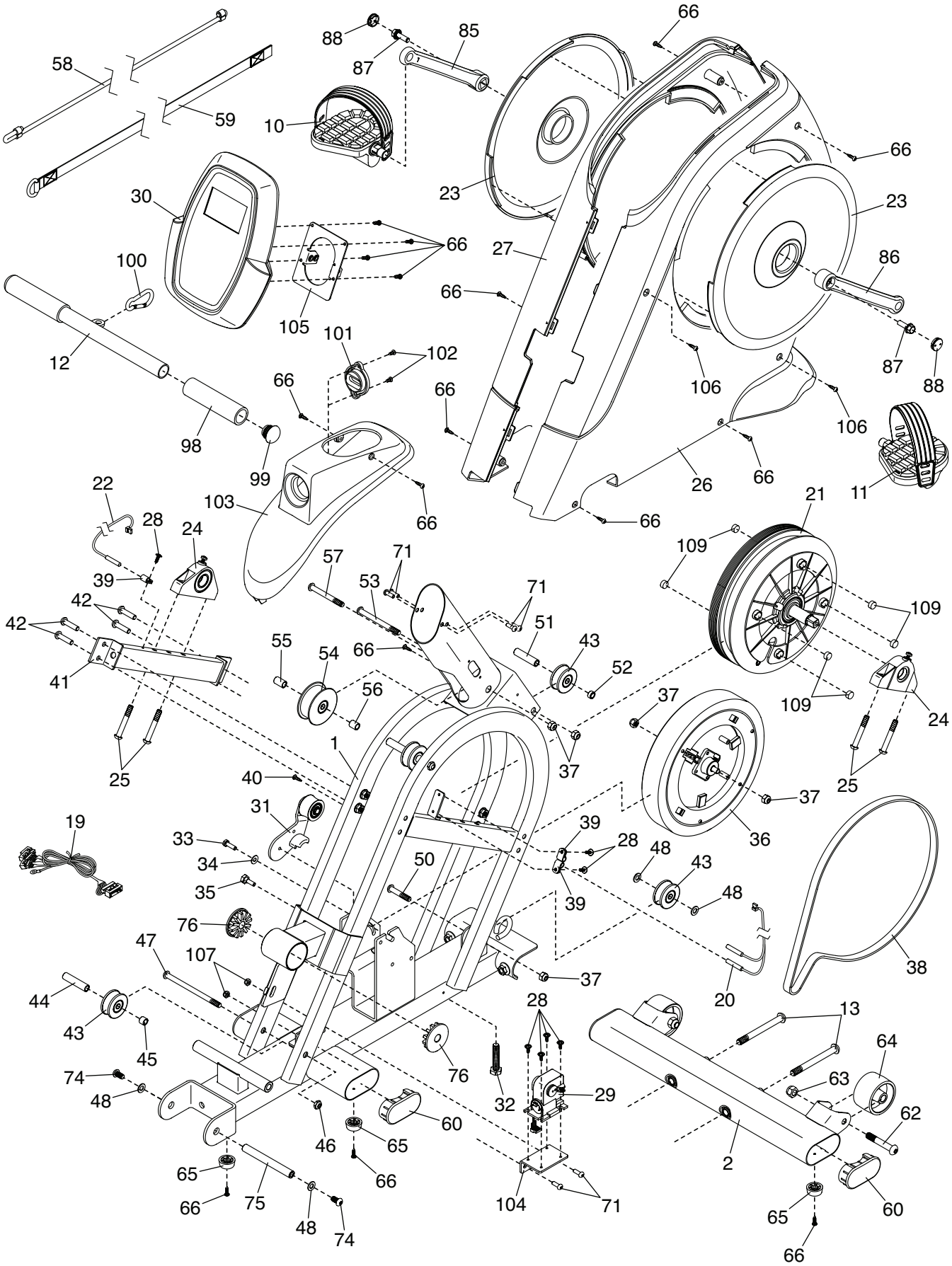
Model No. PFRW66014.0 R0714A