Exploded Drawing Model No. PFSC0790
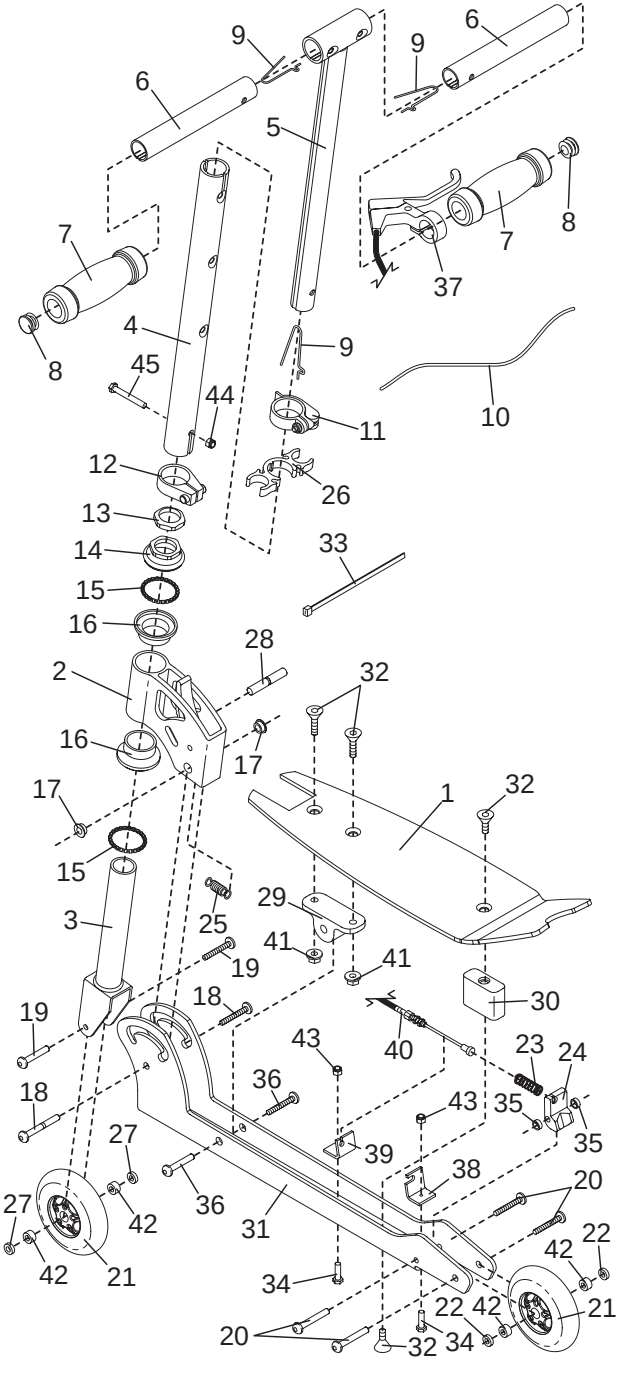
R0101A