Exploded Drawing—Model No. PFSC0980
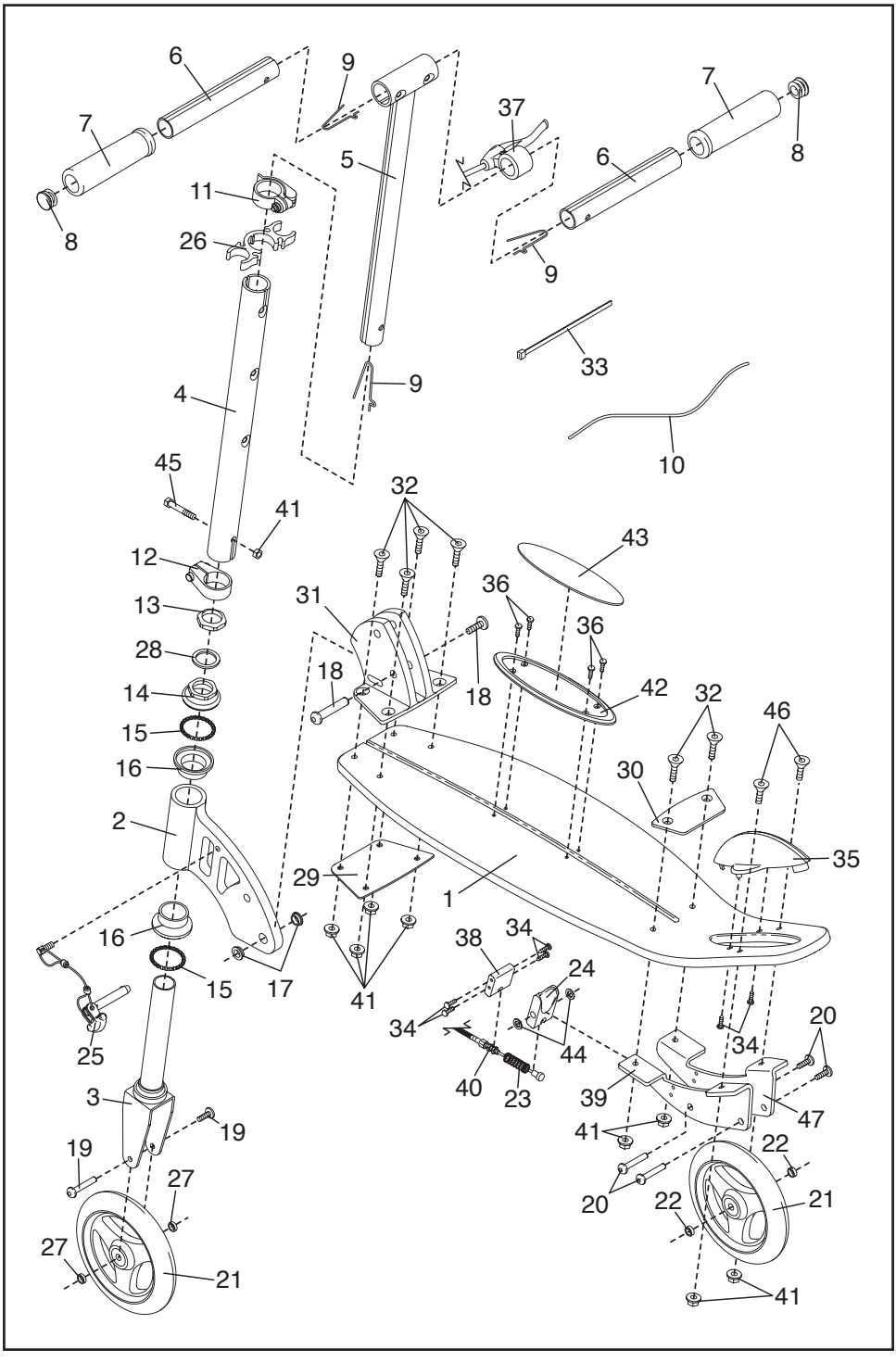
R1000A