Exploded Drawing—Model No. PFSC09900
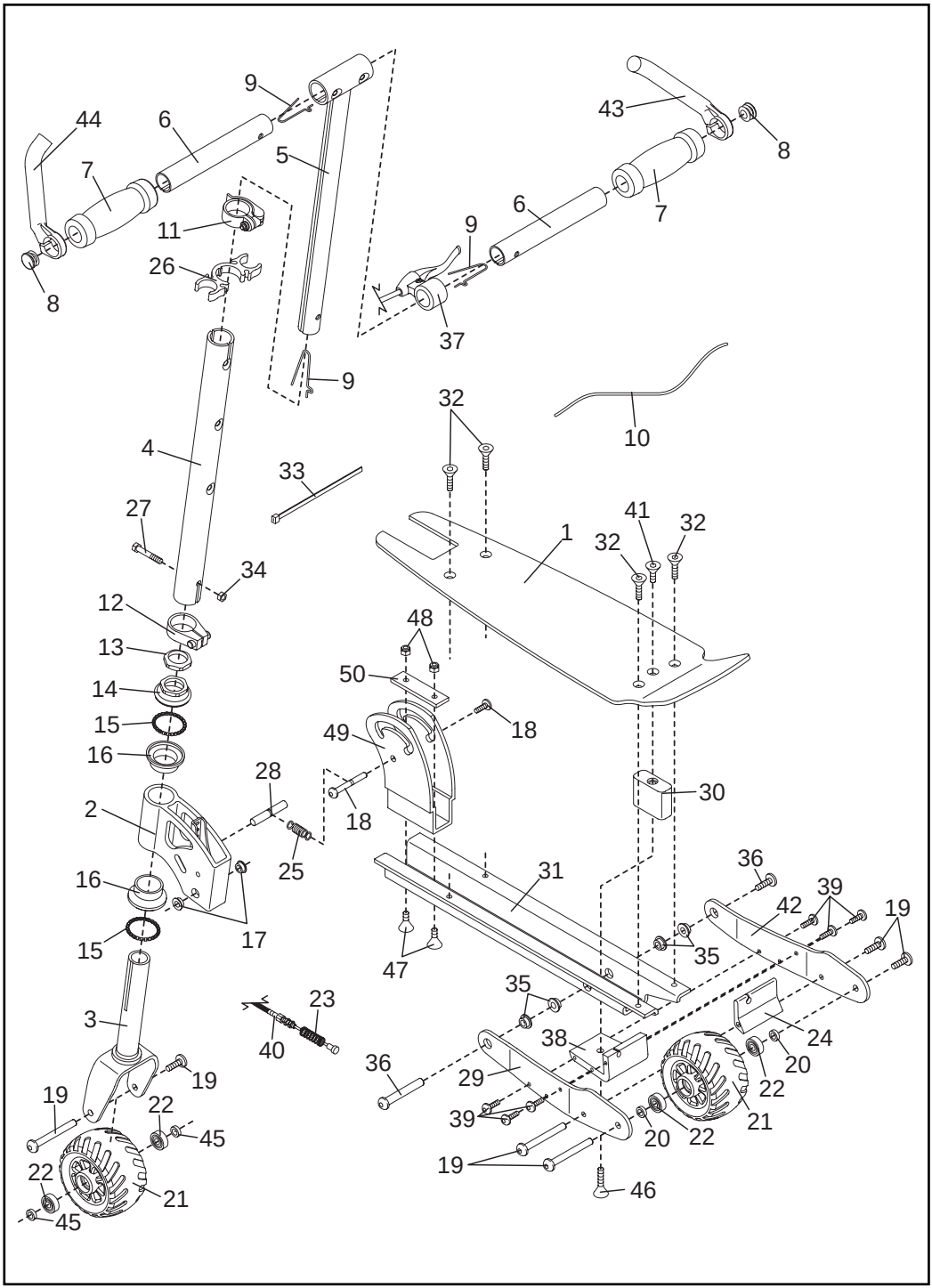
R0101A