EXPLODED DRAWING A

Model No. PFTL13820.3 R0921A

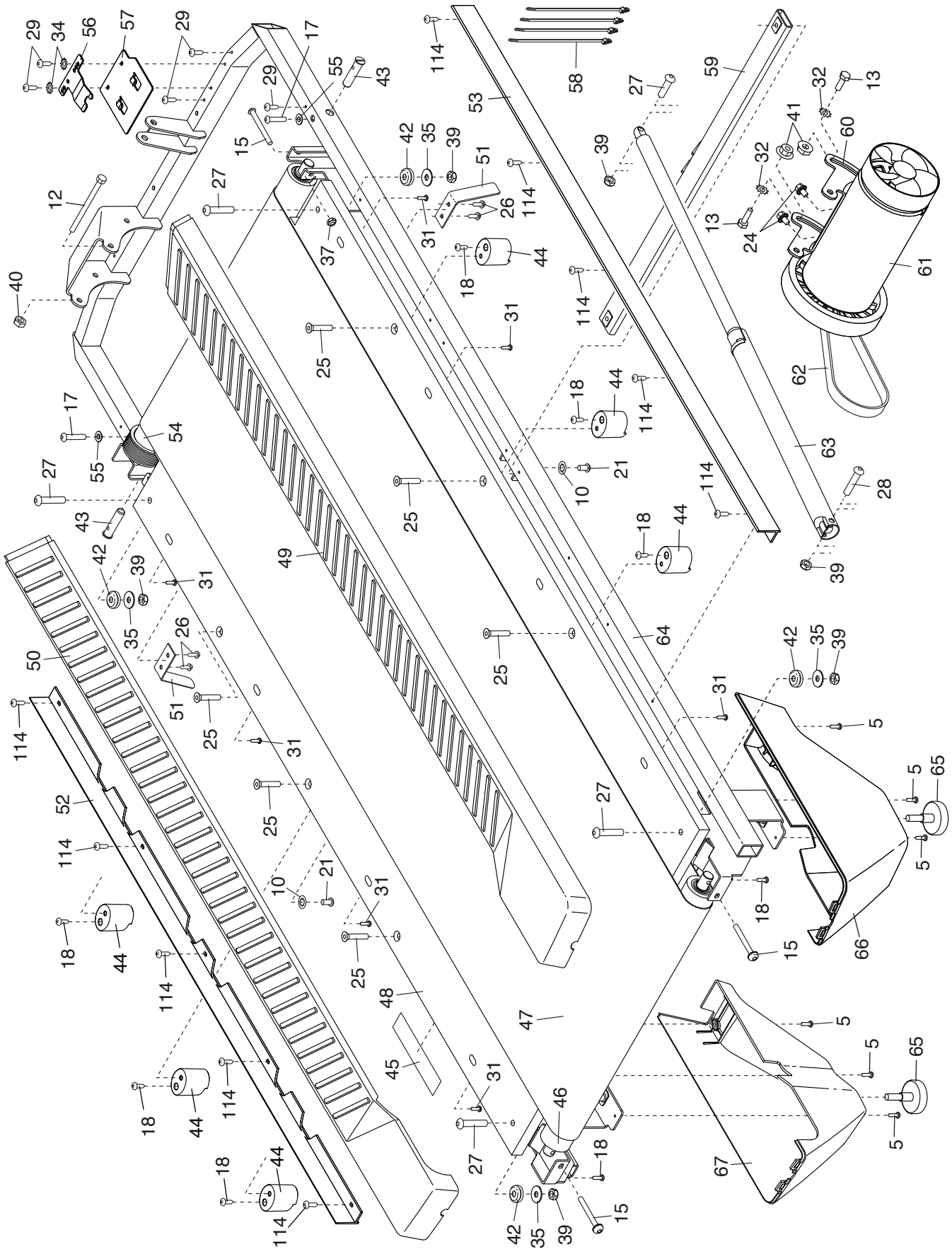

EXPLODED DRAWING B

Model No. PFTL13820.3 R0921A

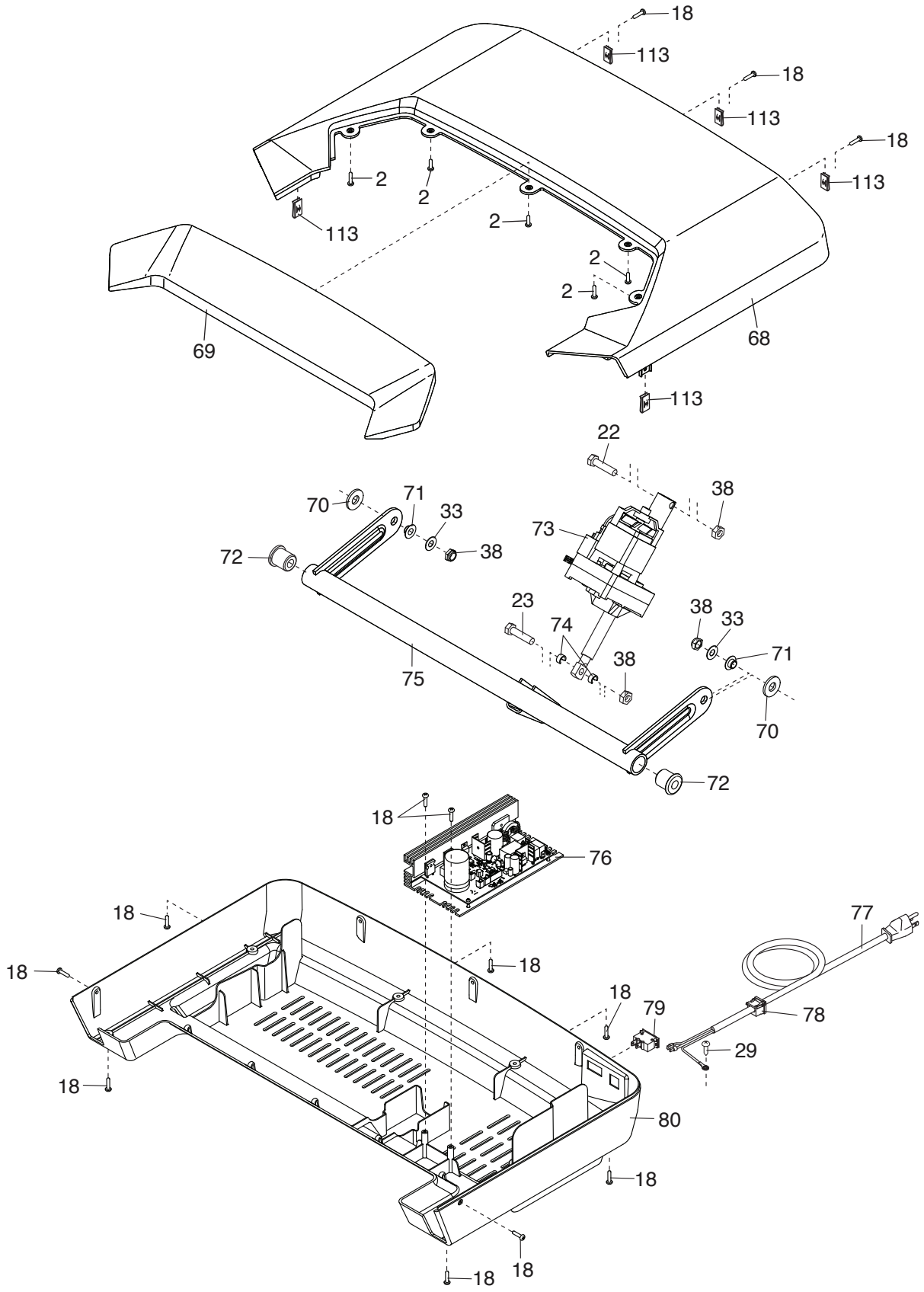

EXPLODED DRAWING C

Model No. PFTL13820.3 R0921A

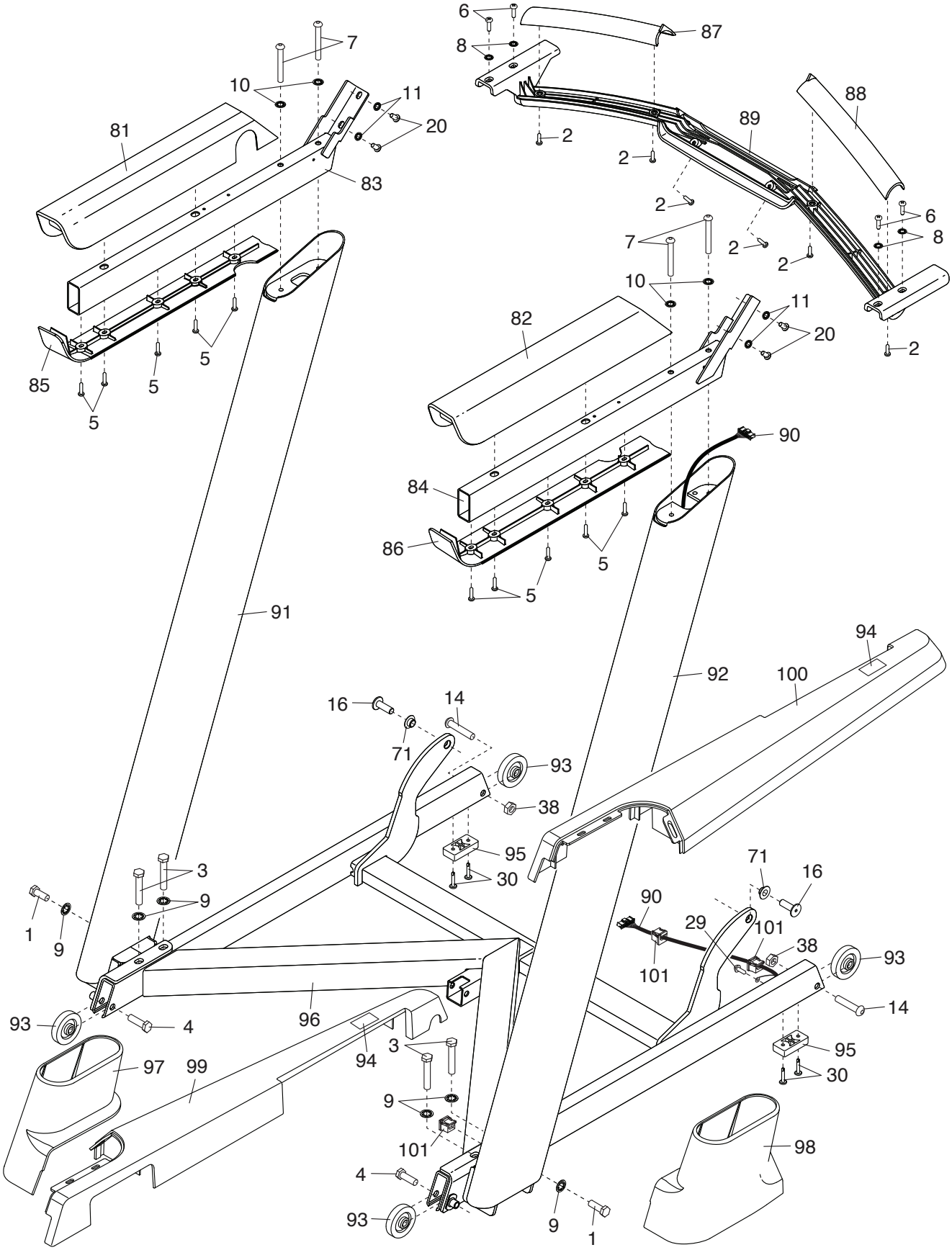

EXPLODED DRAWING D

Model No. PFTL13820.3 R0921A

