EXPLODED DRAWING—Model No. PFTL38571
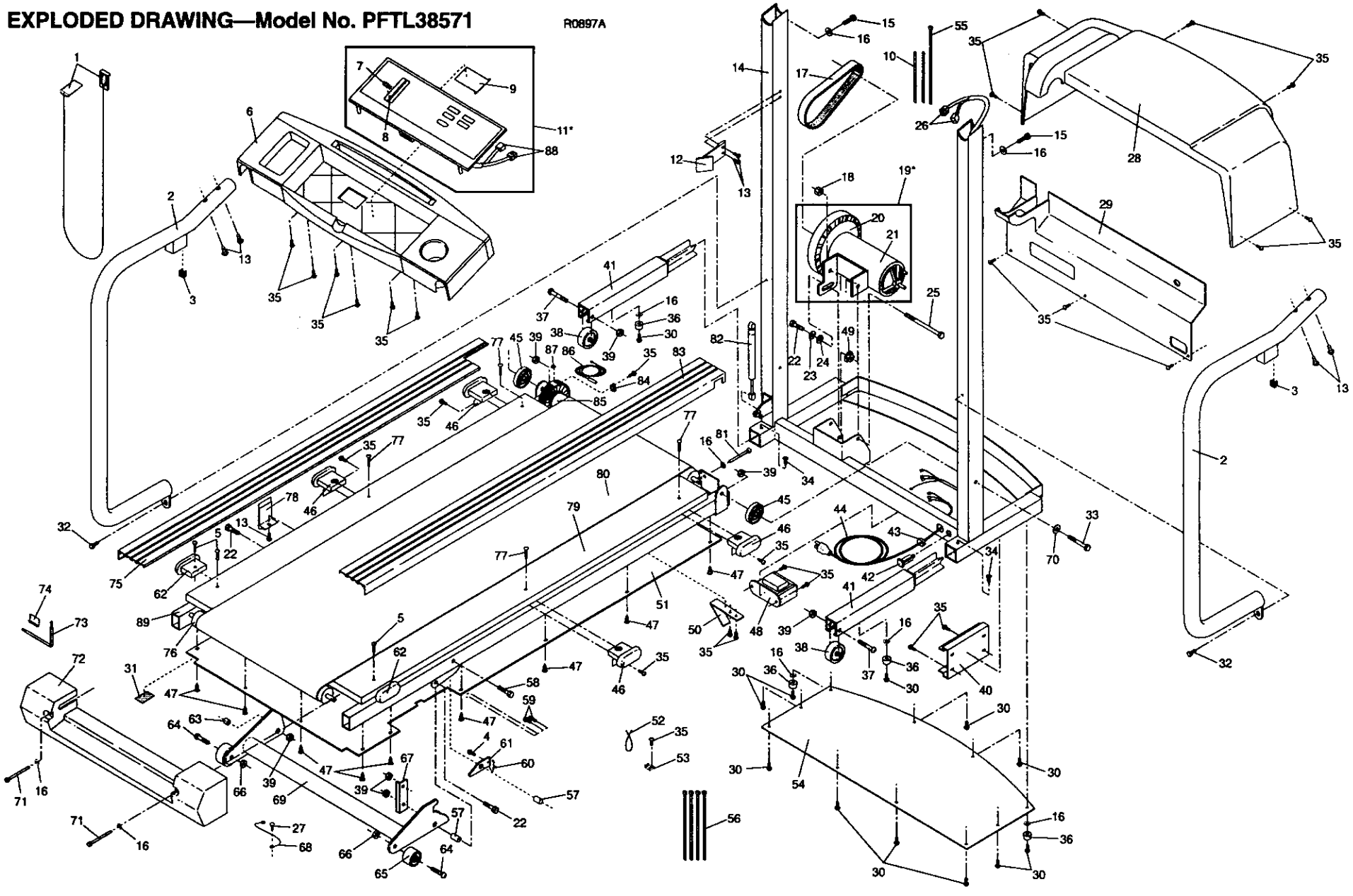
R0897A