EXPLODED DRAWING—Model No. PFTL38580
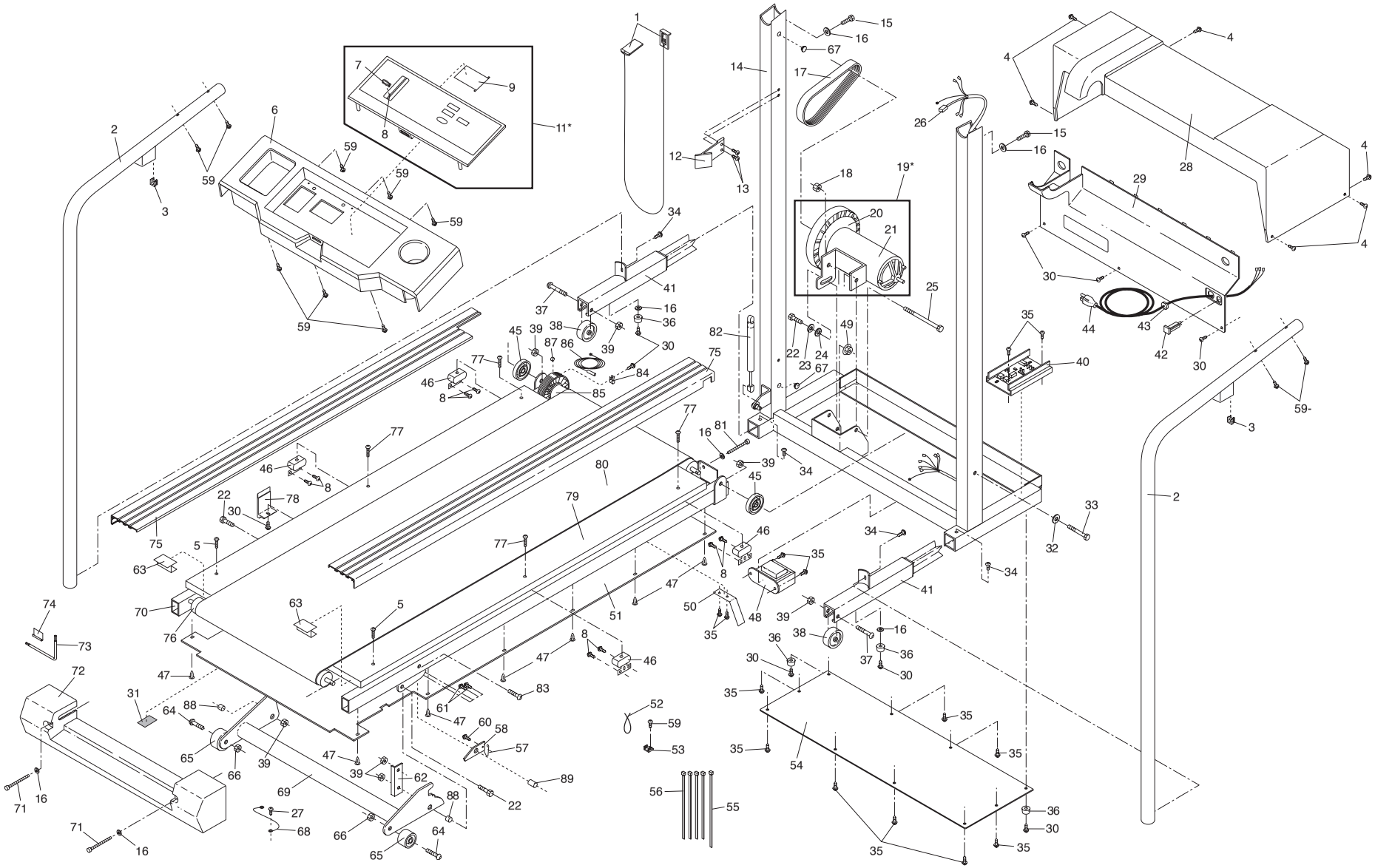
R0399A