EXPLODED DRAWING—Model No. PFTL43205.0
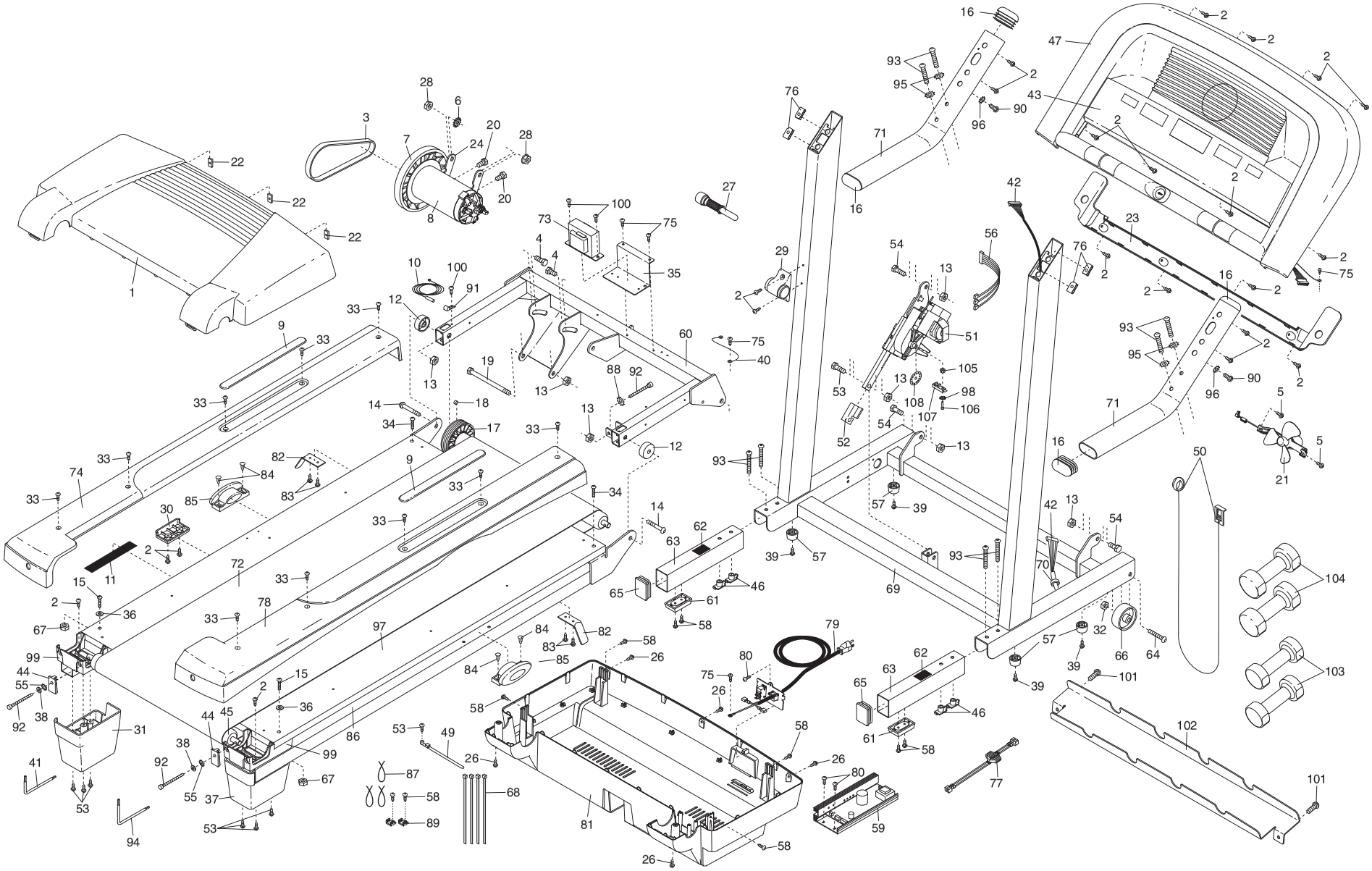
R0106A