EXPLODED DRAWING—Model No. PFTL49100
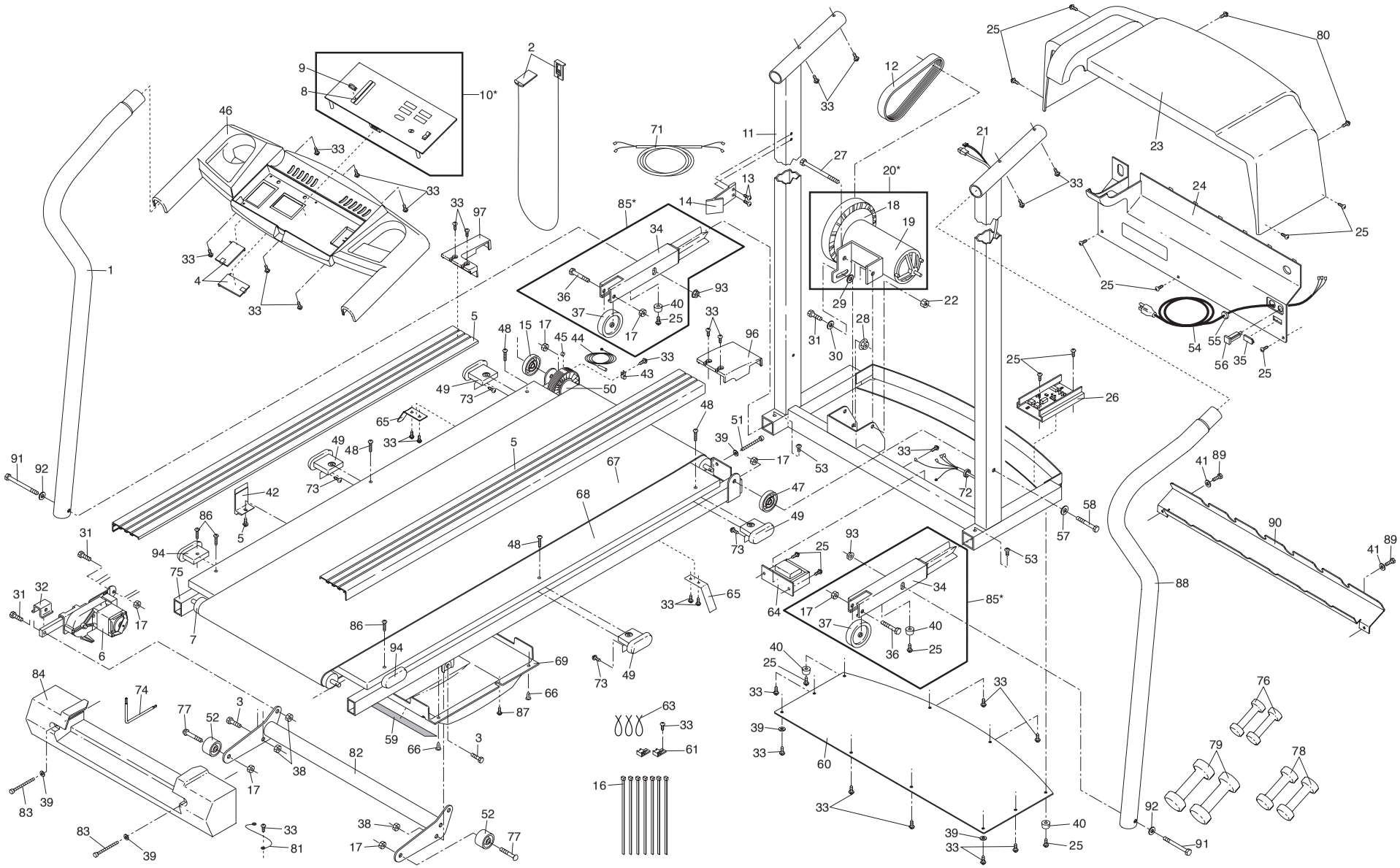
R0800A