EXPLODED DRAWING—Model No. PFTL512040

R0804A

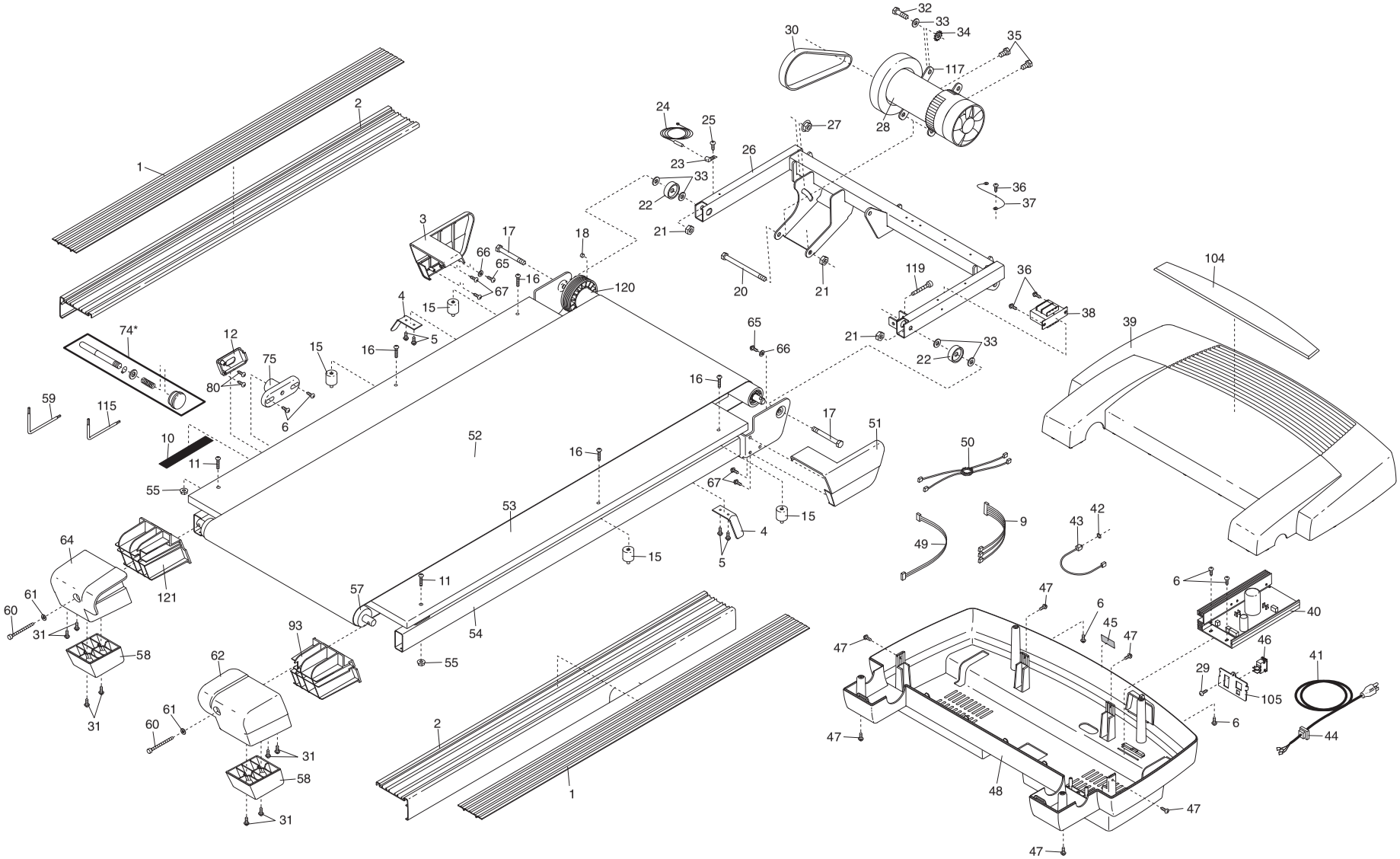

EXPLODED DRAWING—Model No. PFTL512040
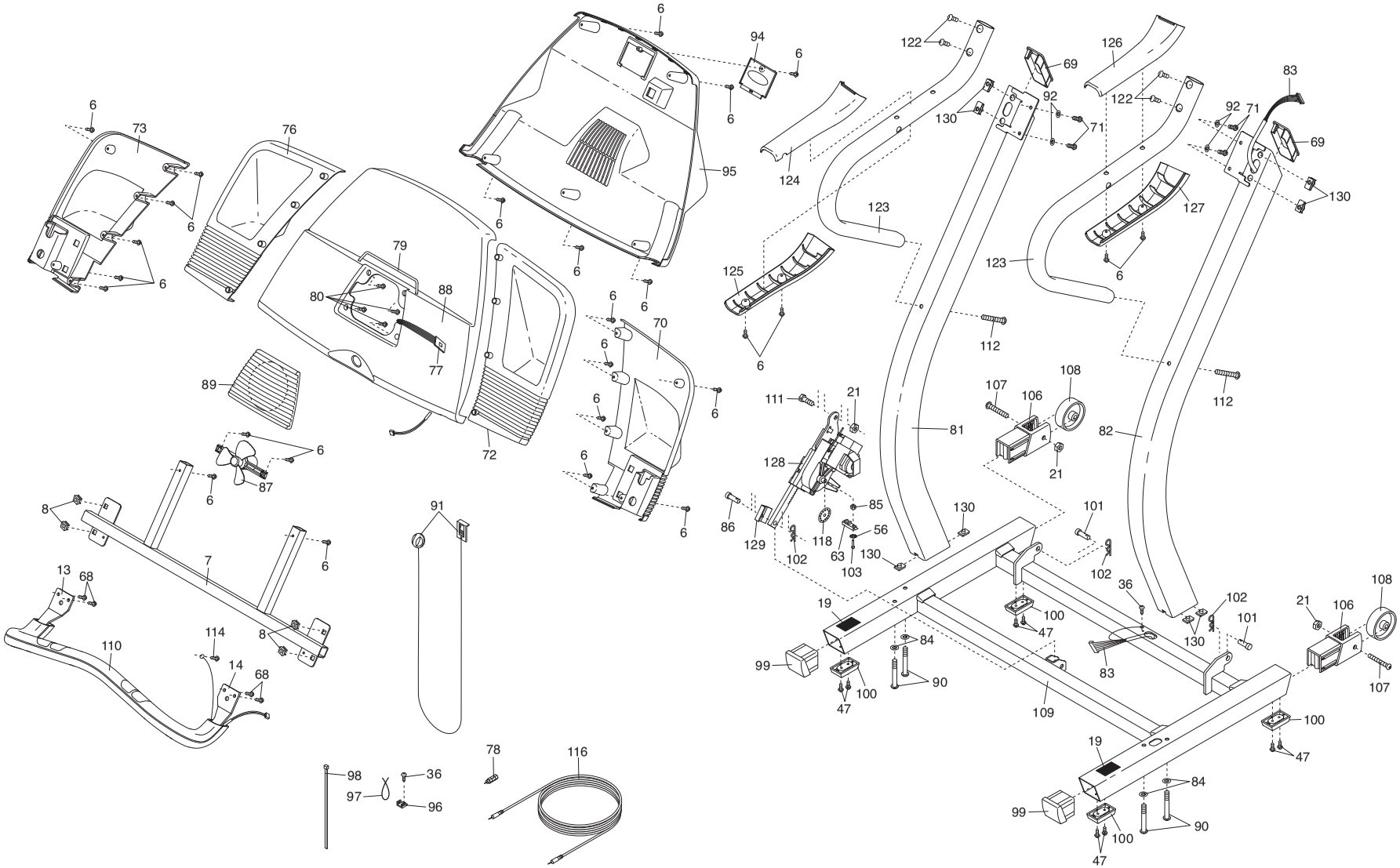
R0804A