EXPLODED DRAWING—Model No. PFTL59022
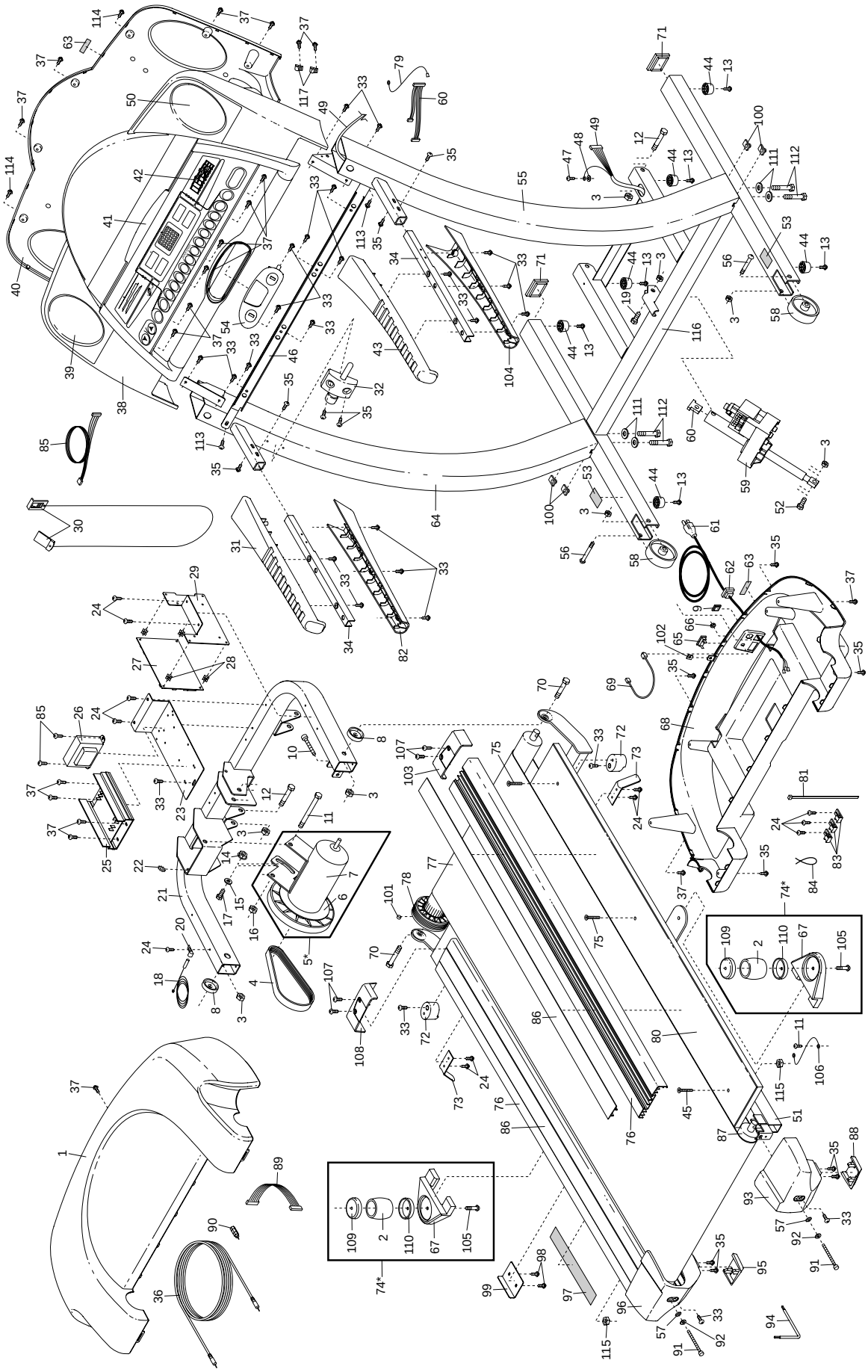
R0203A