EXPLODED DRAWING A

Model No. PFTL59420.1 R0221B

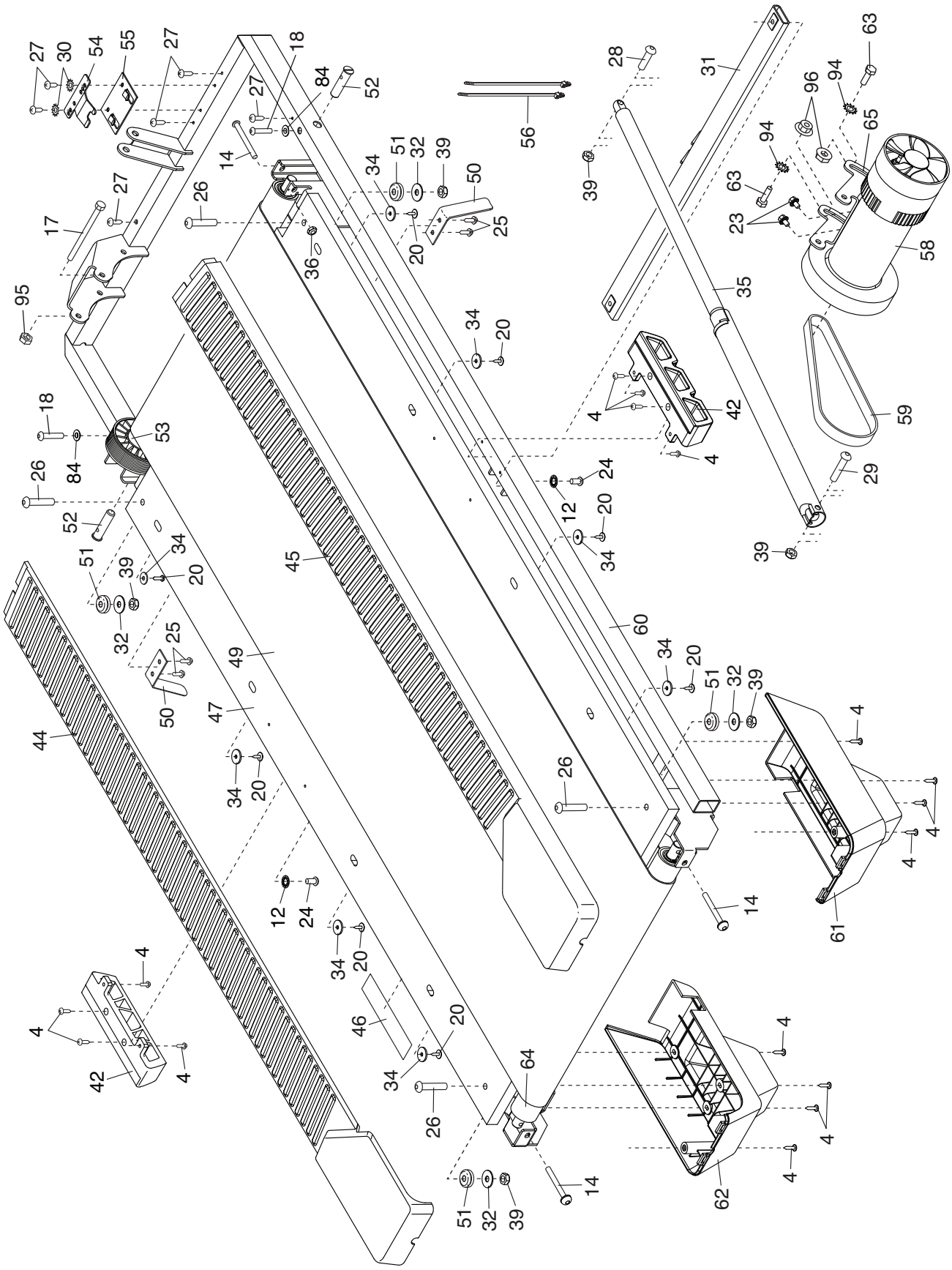

EXPLODED DRAWING B

Model No. PFTL59420.1 R0221B

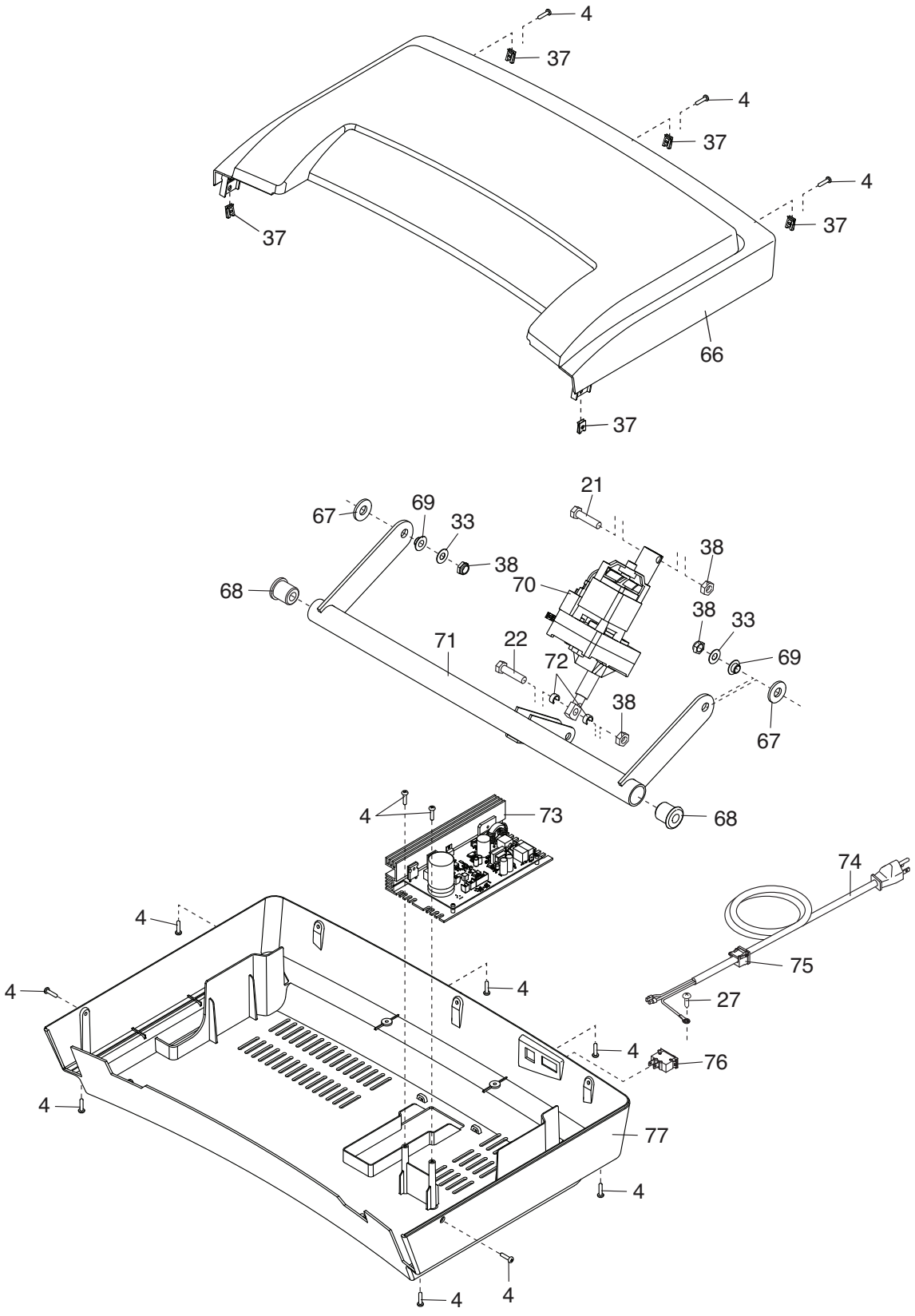

EXPLODED DRAWING C

Model No. PFTL59420.1 R0221B

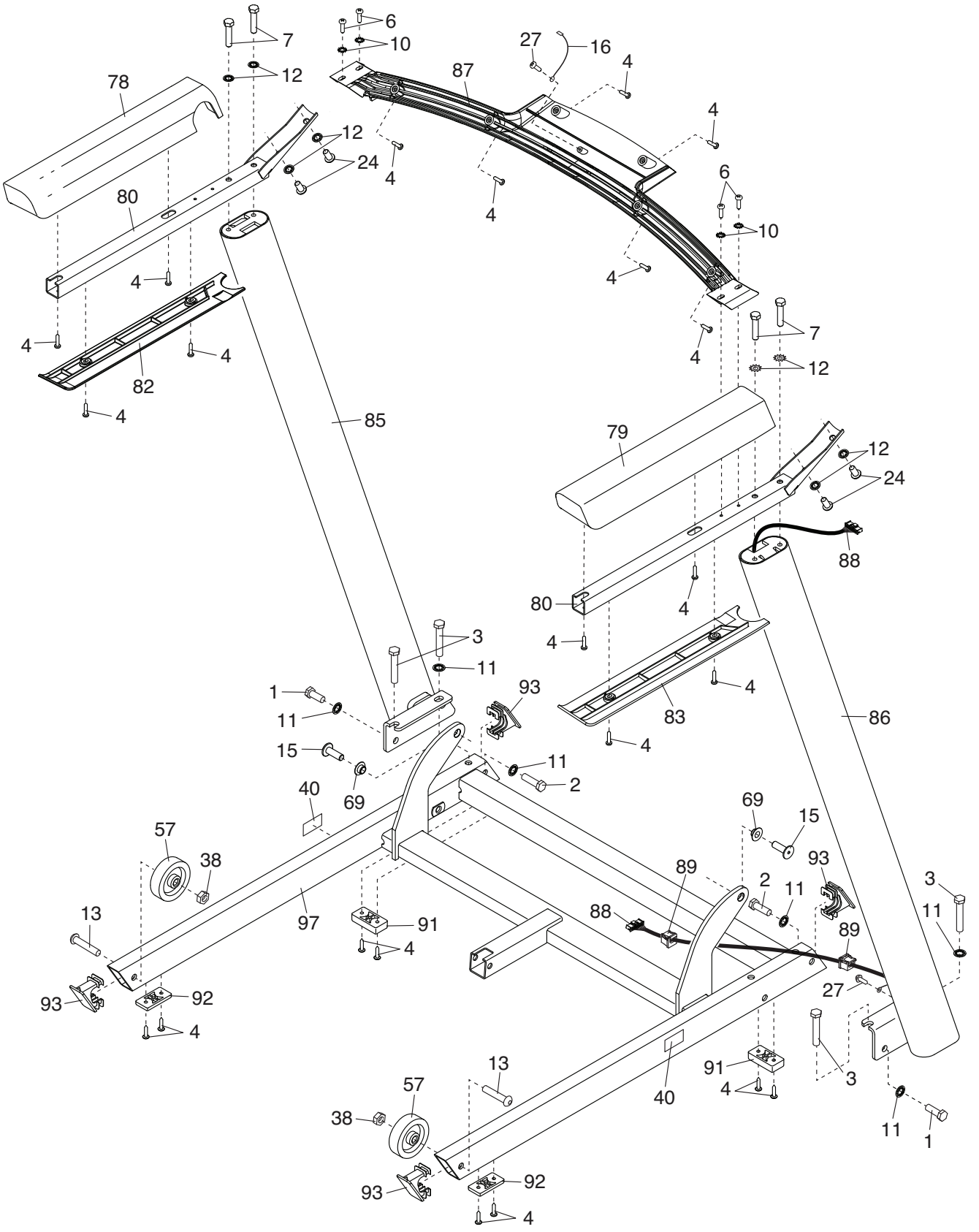

EXPLODED DRAWING D

Model No. PFTL59420.1 R0221B

