EXPLODED DRAWING—Model No. PFTL78580

R0399A

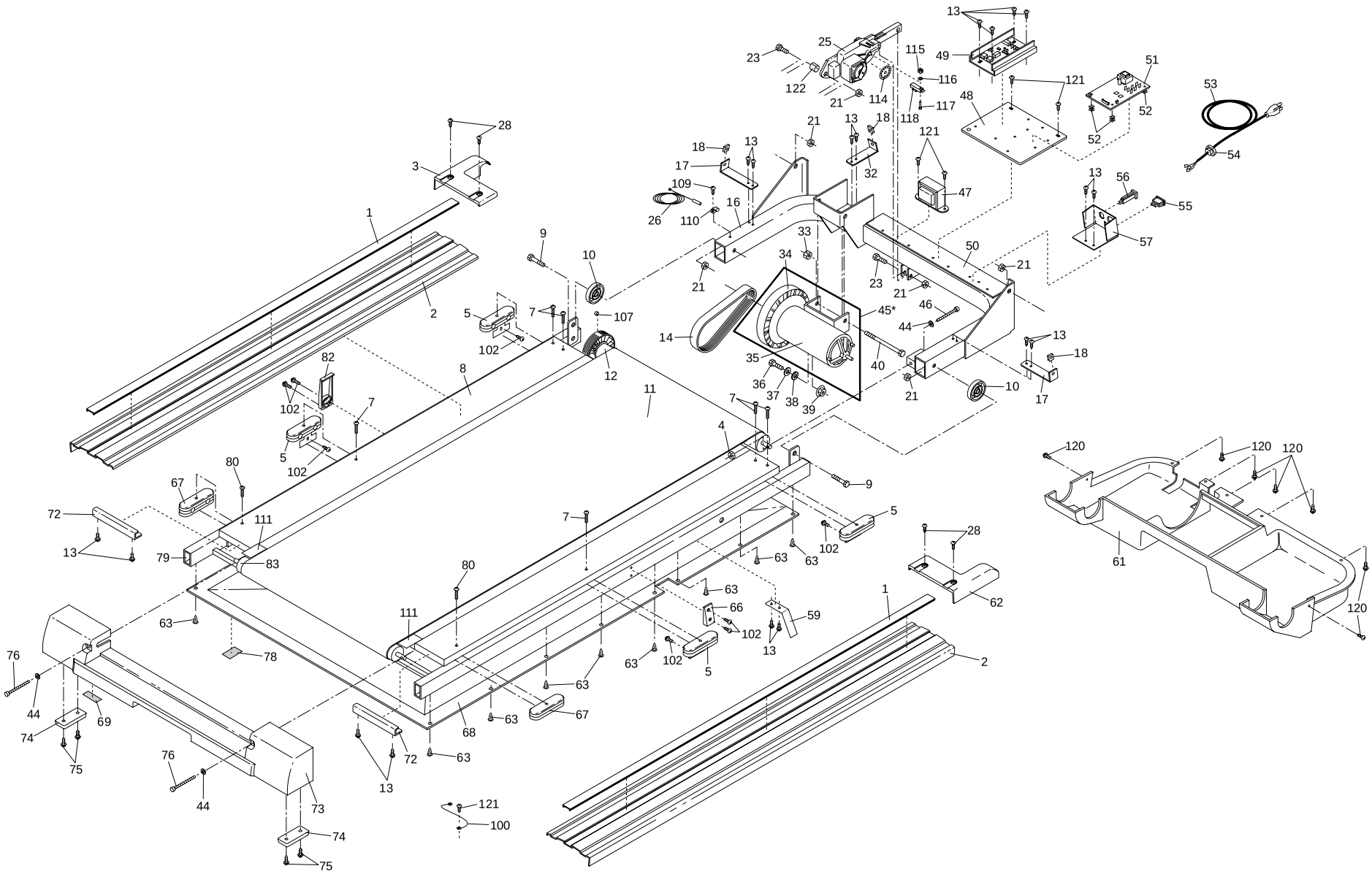

EXPLODED DRAWING—Model No. PFTL78580
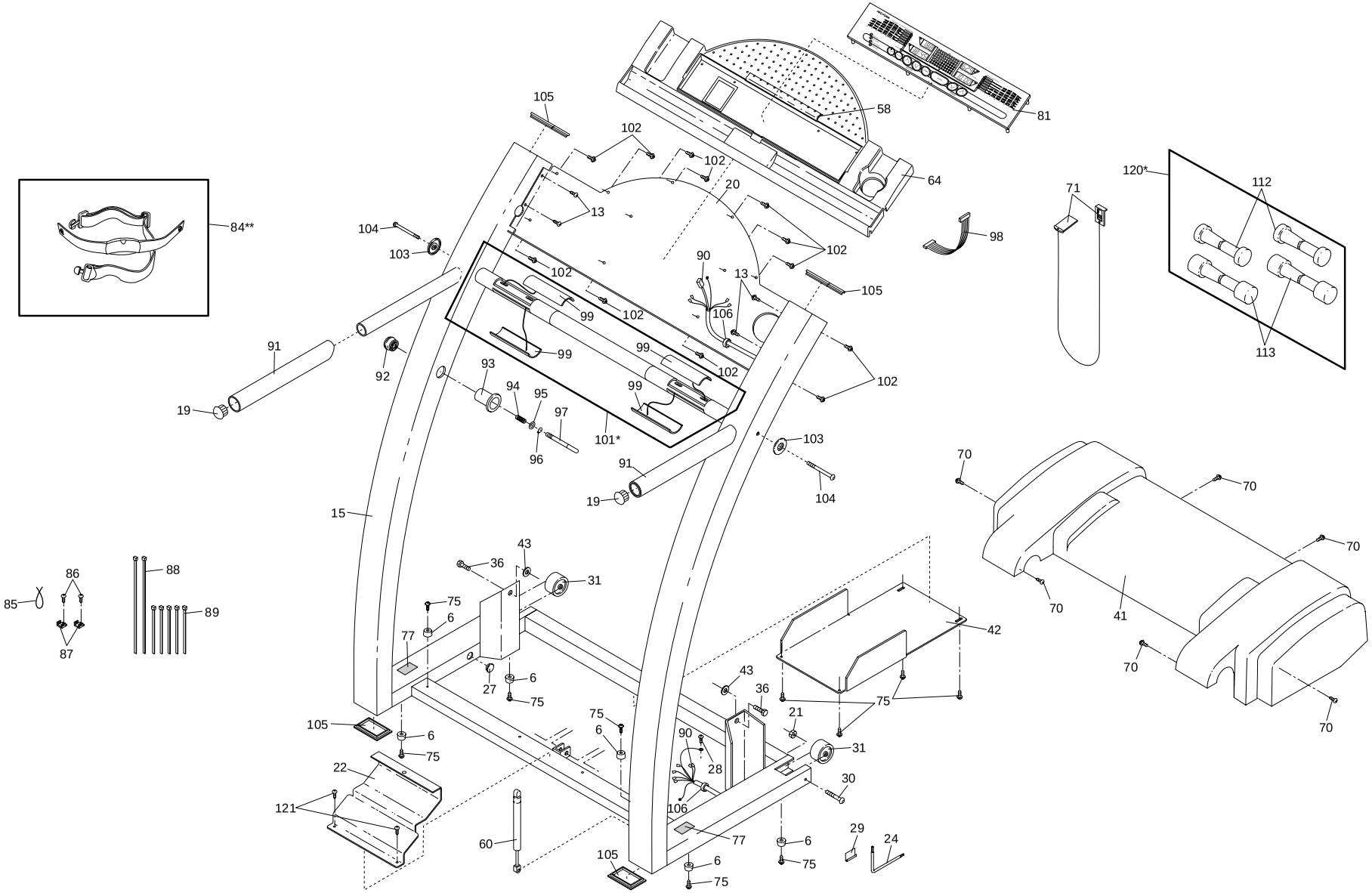
R0399A