EXPLODED DRAWING—Model No. PFTL79190

R1199B

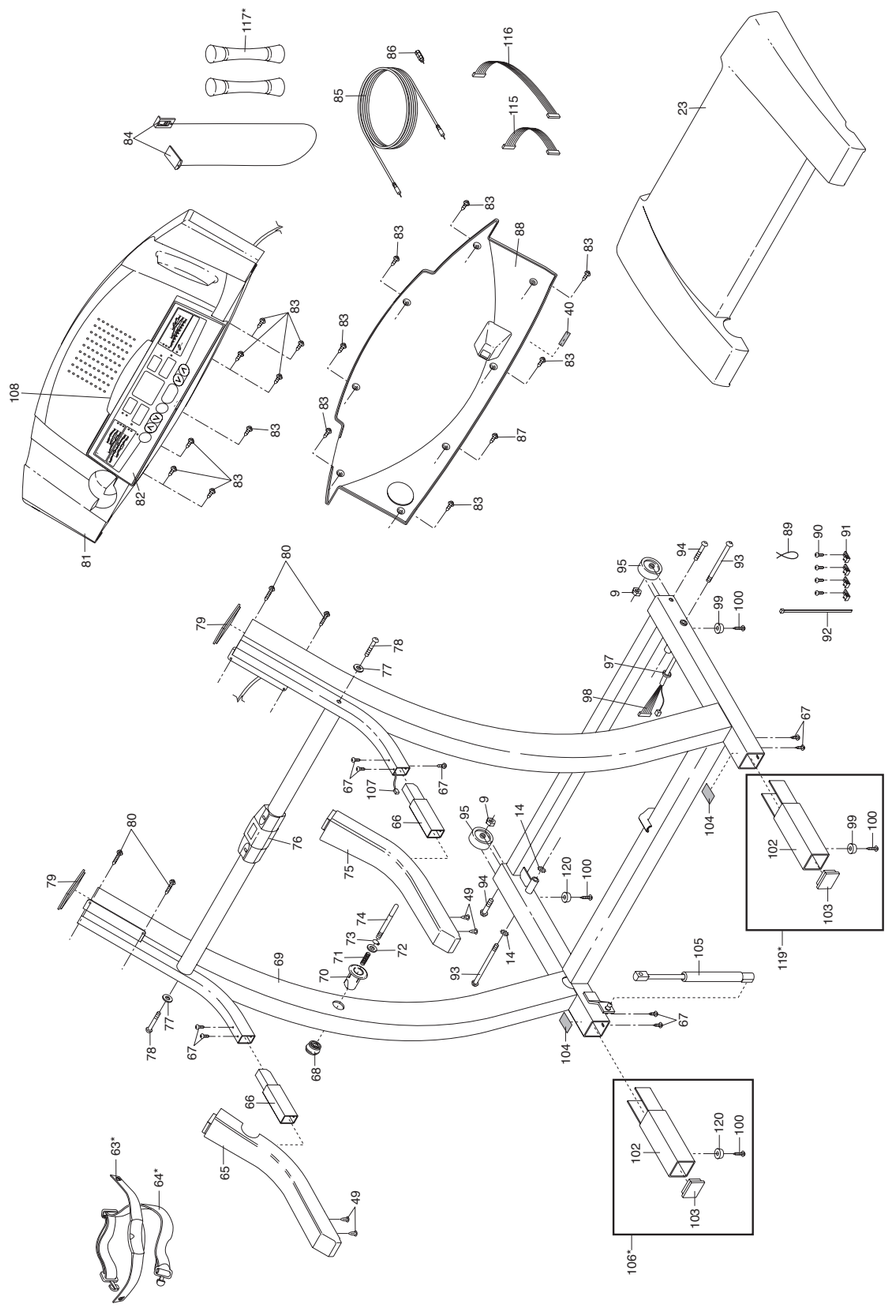

EXPLODED DRAWING—Model No. PFTL79190
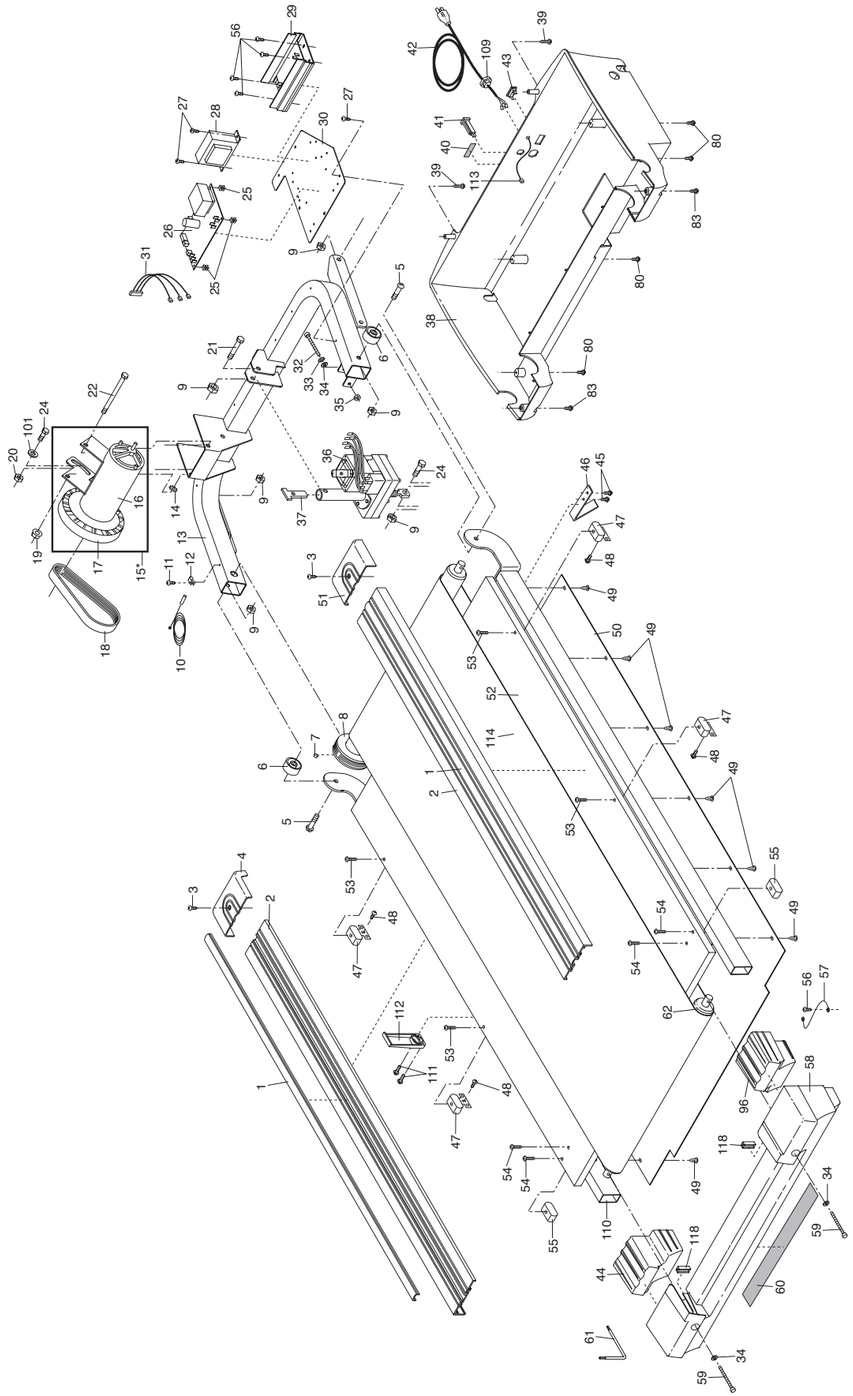
R1199B