EXPLODED DRAWING A

Model No. PFTL99117.0 R1217A

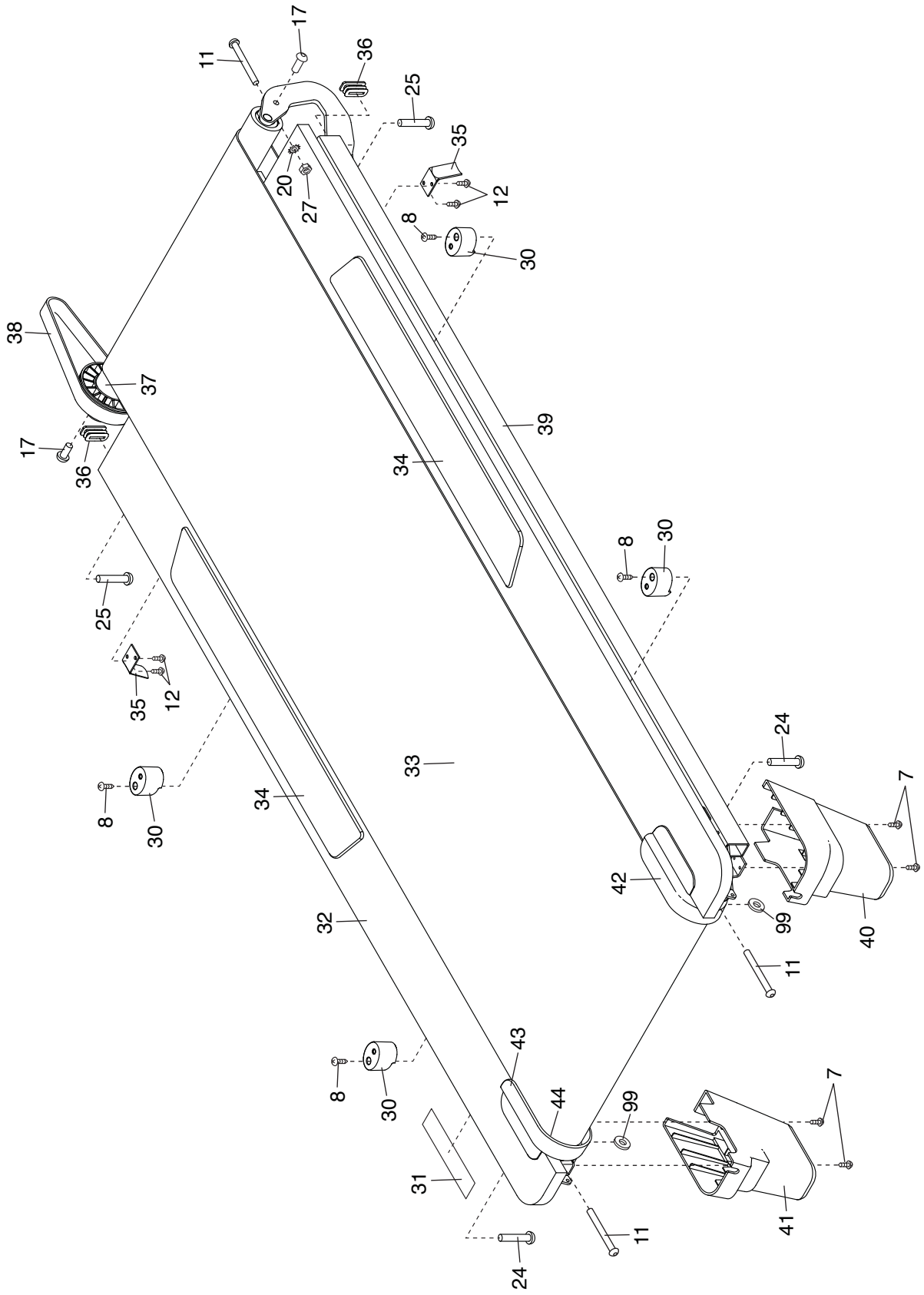

EXPLODED DRAWING B

Model No. PFTL99117.0 R1217A

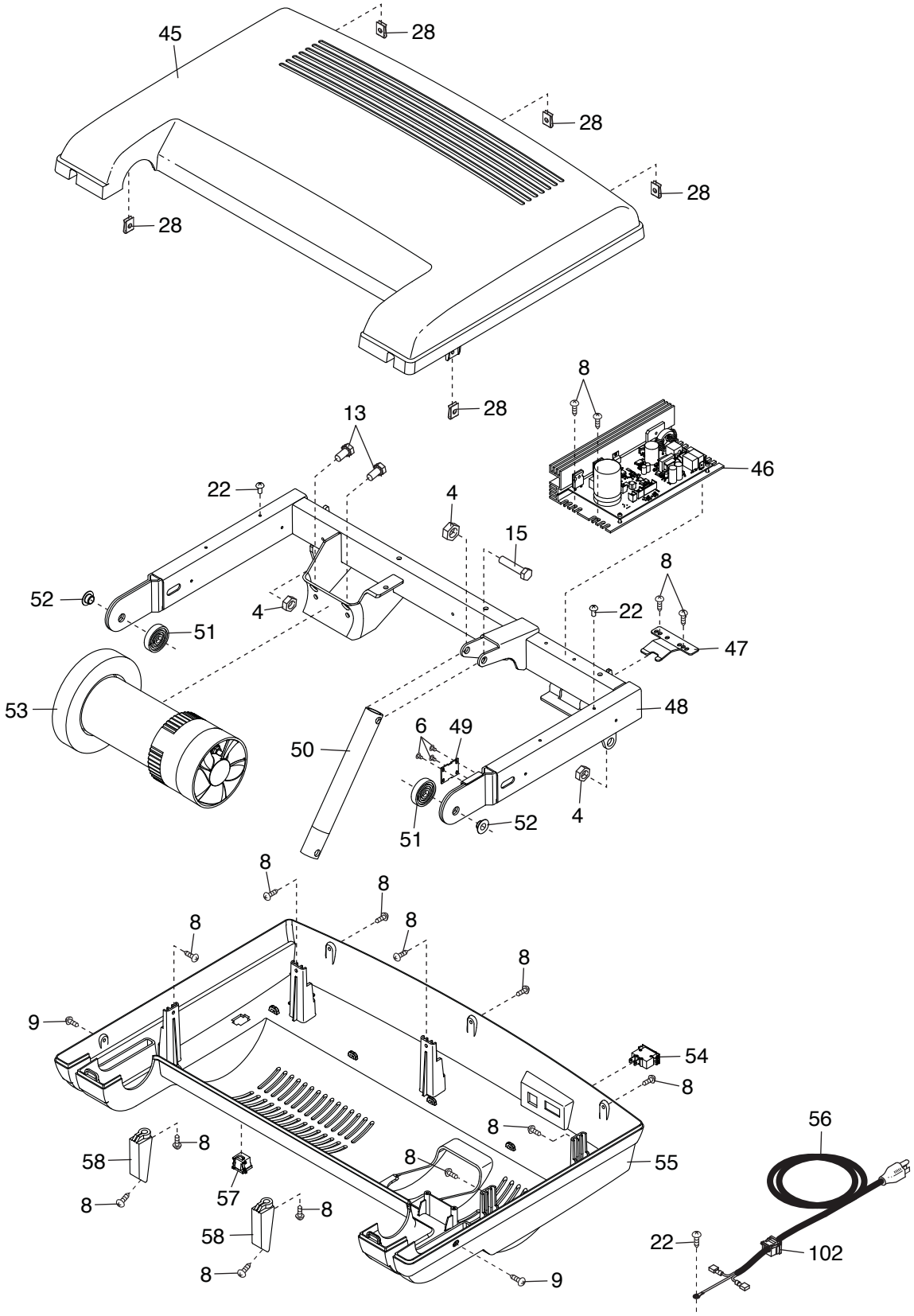

EXPLODED DRAWING C

Model No. PFTL99117.0 R1217A

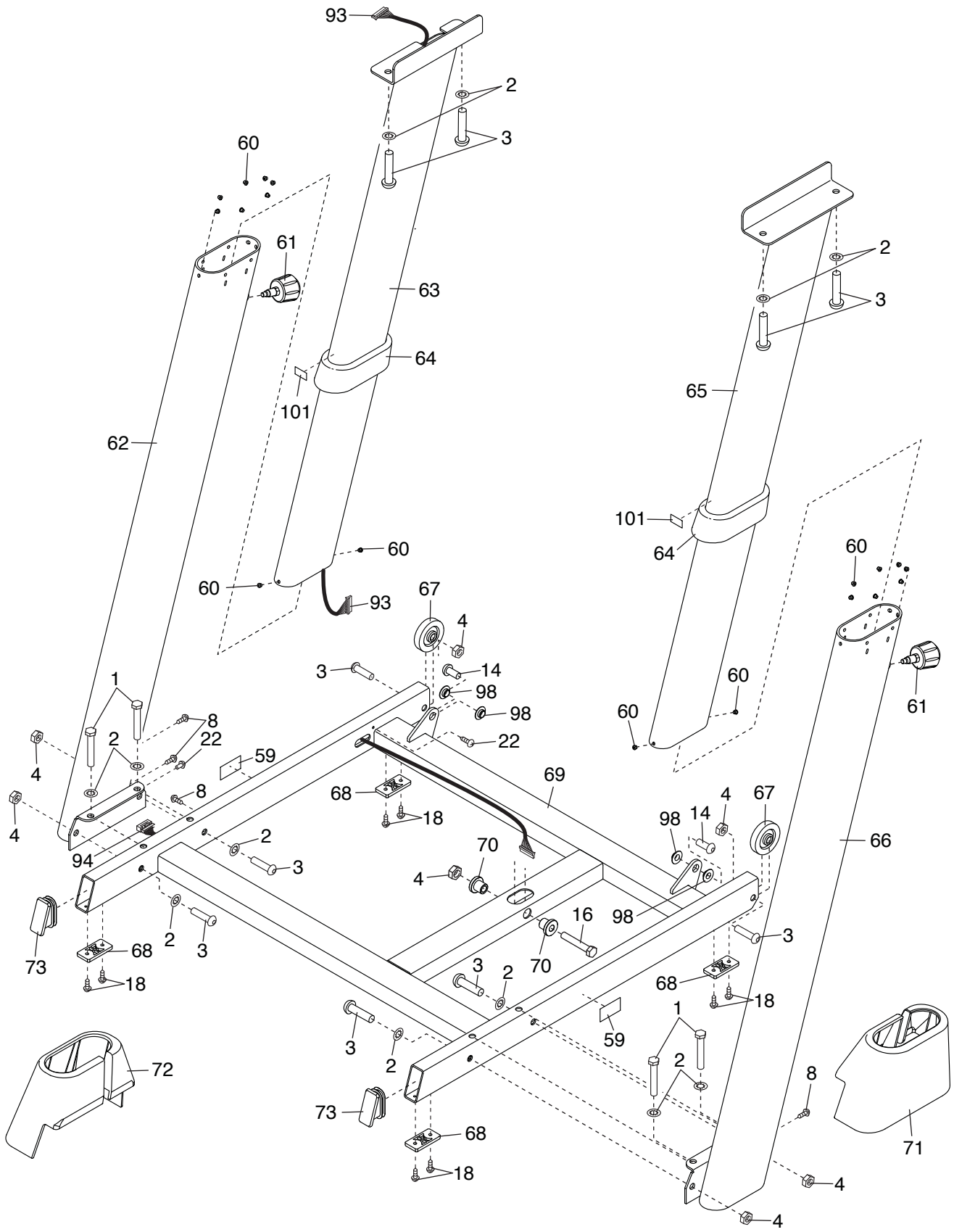

EXPLODED DRAWING D
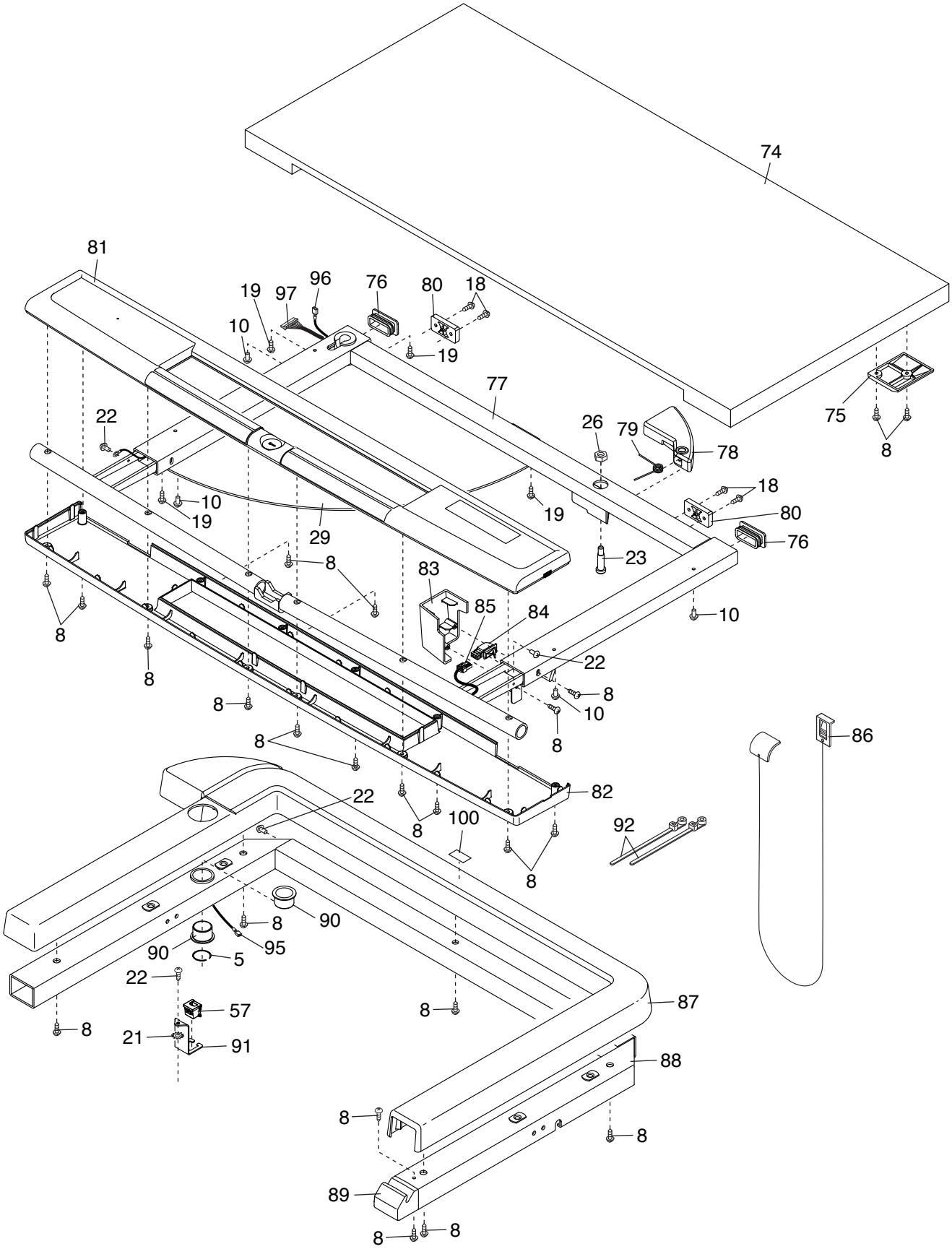
Model No. PFTL99117.0 R1217A