EXPLODED DRAWING A—Model No. RBEL9906.3

R0508A

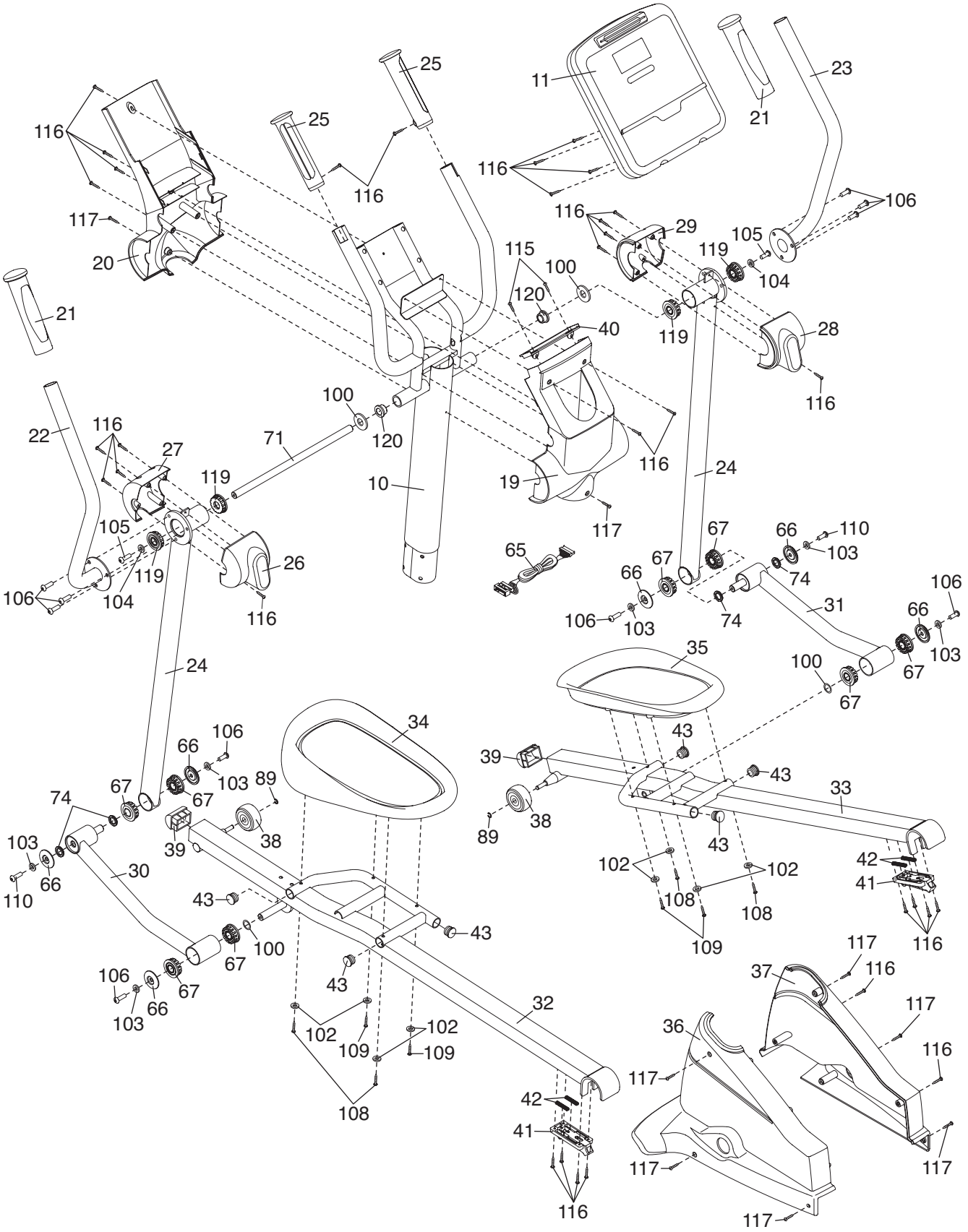

EXPLODED DRAWING B—Model No. RBEL9906.3
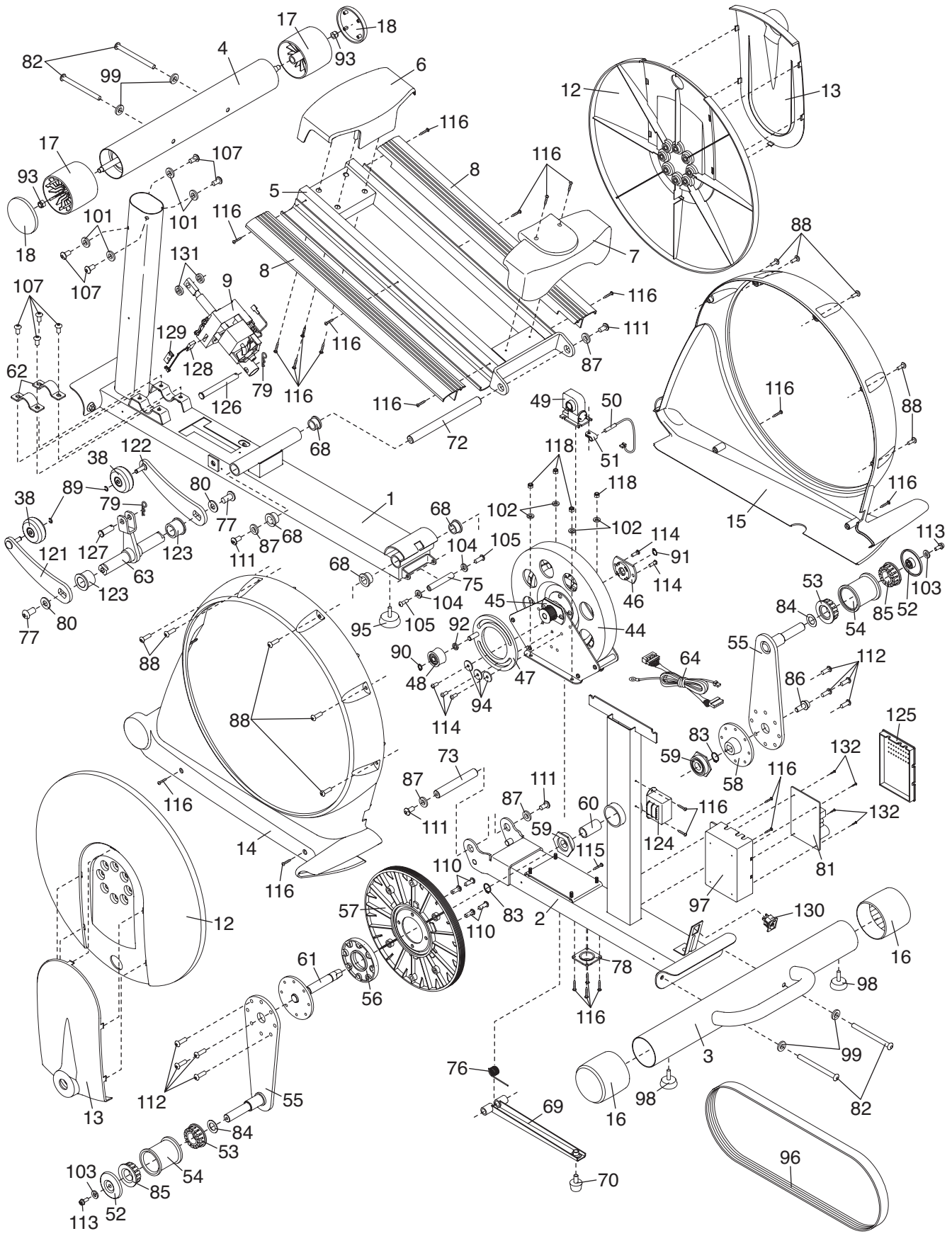
R0508A