EXPLODED DRAWING
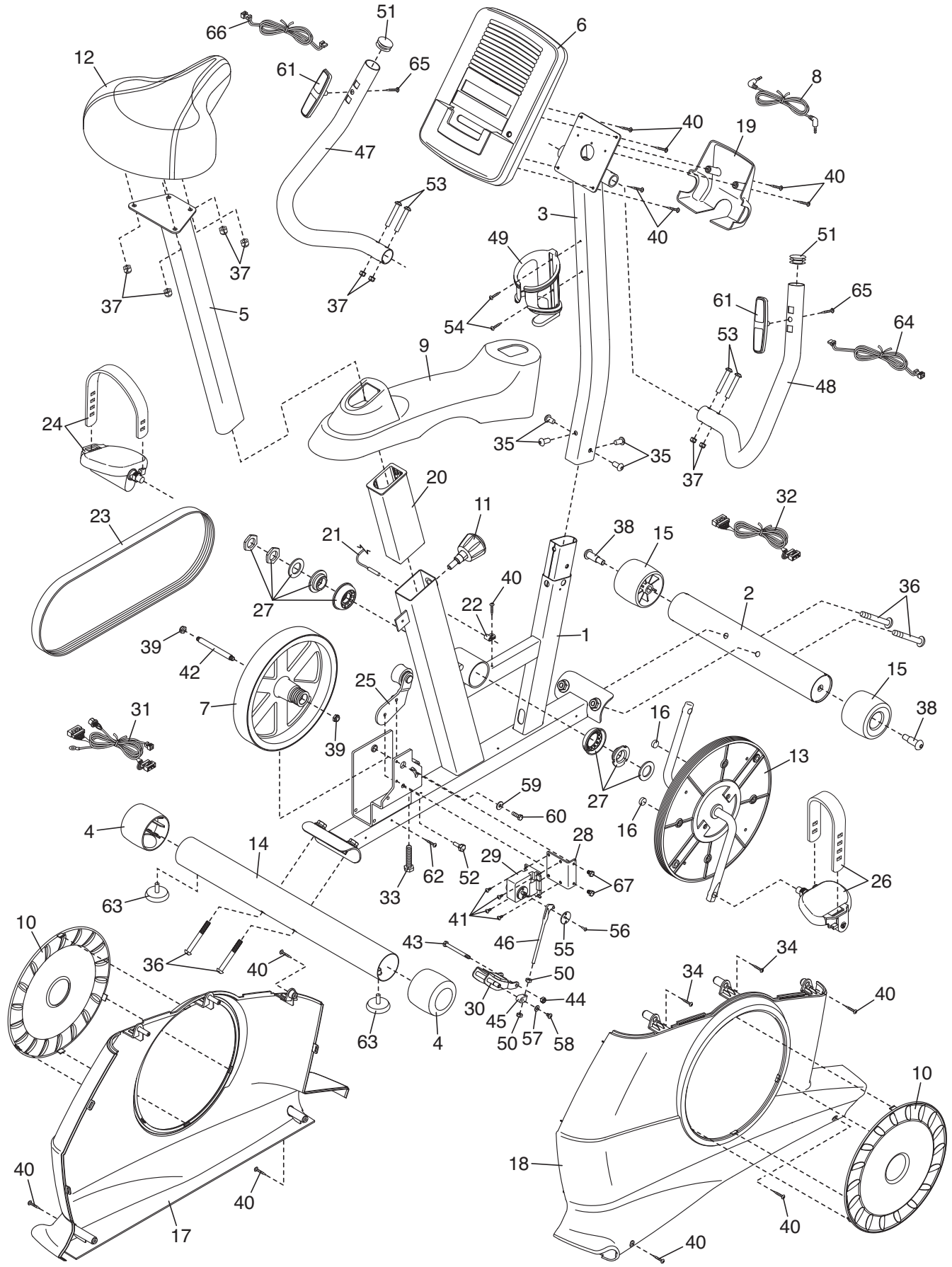
Model No. RBEX11911.1 R1211A