EXPLODED DRAWING
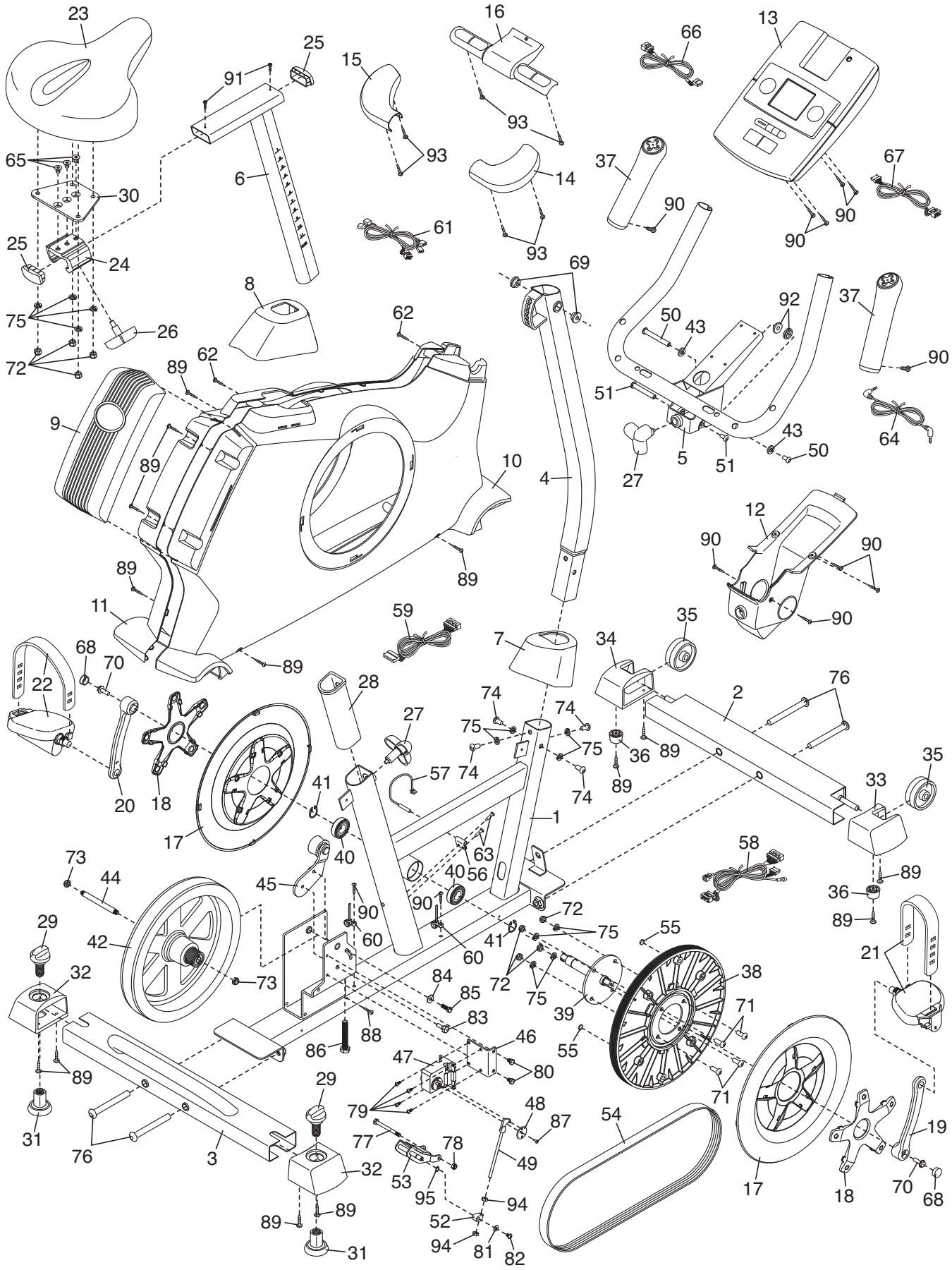
Model No. RBEX13010.1 R1011A