EXPLODED DRAWING—MODEL NO. RBEX2976.1
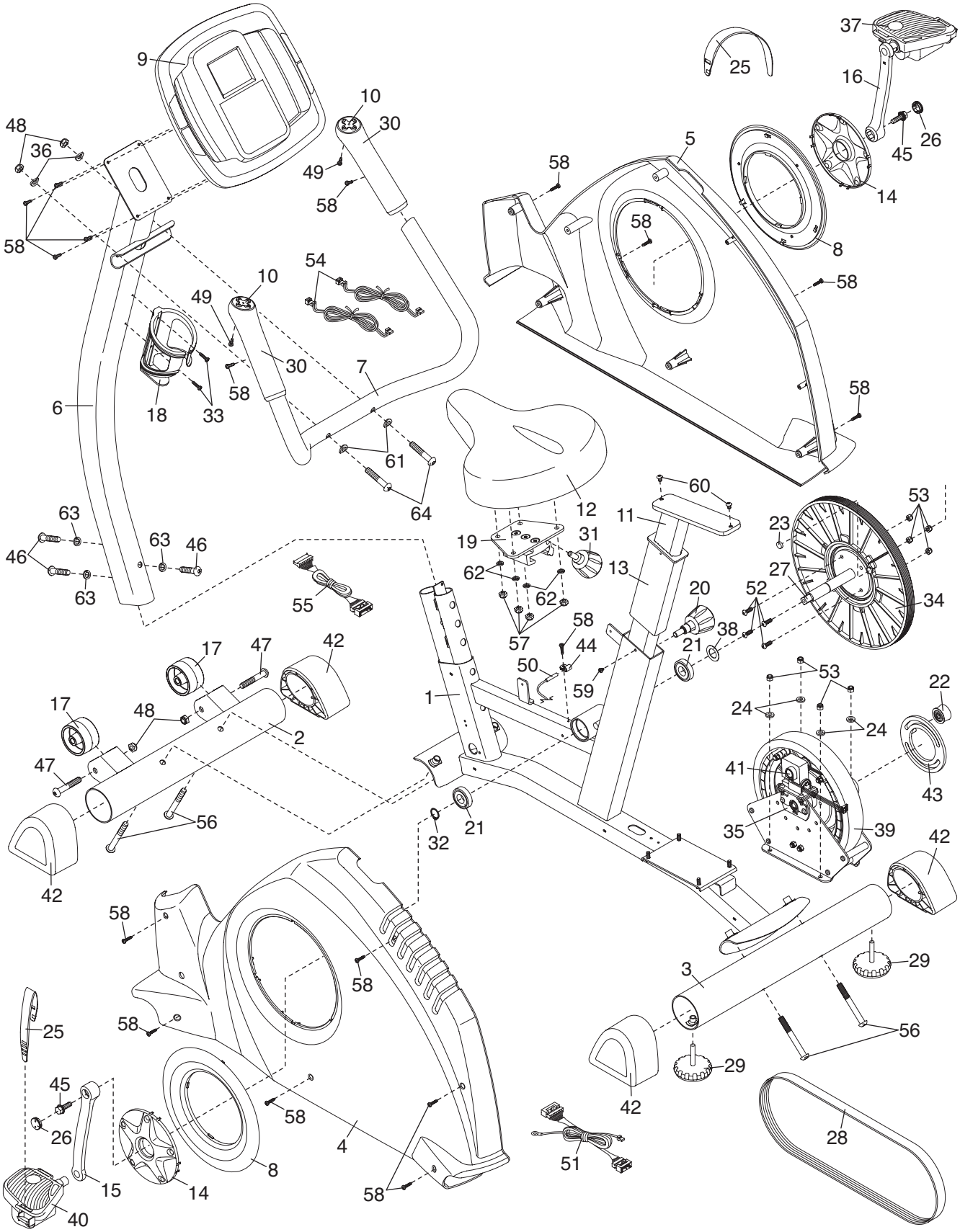
R1206A