EXPLODED DRAWING—Model No. RBEX2976.2
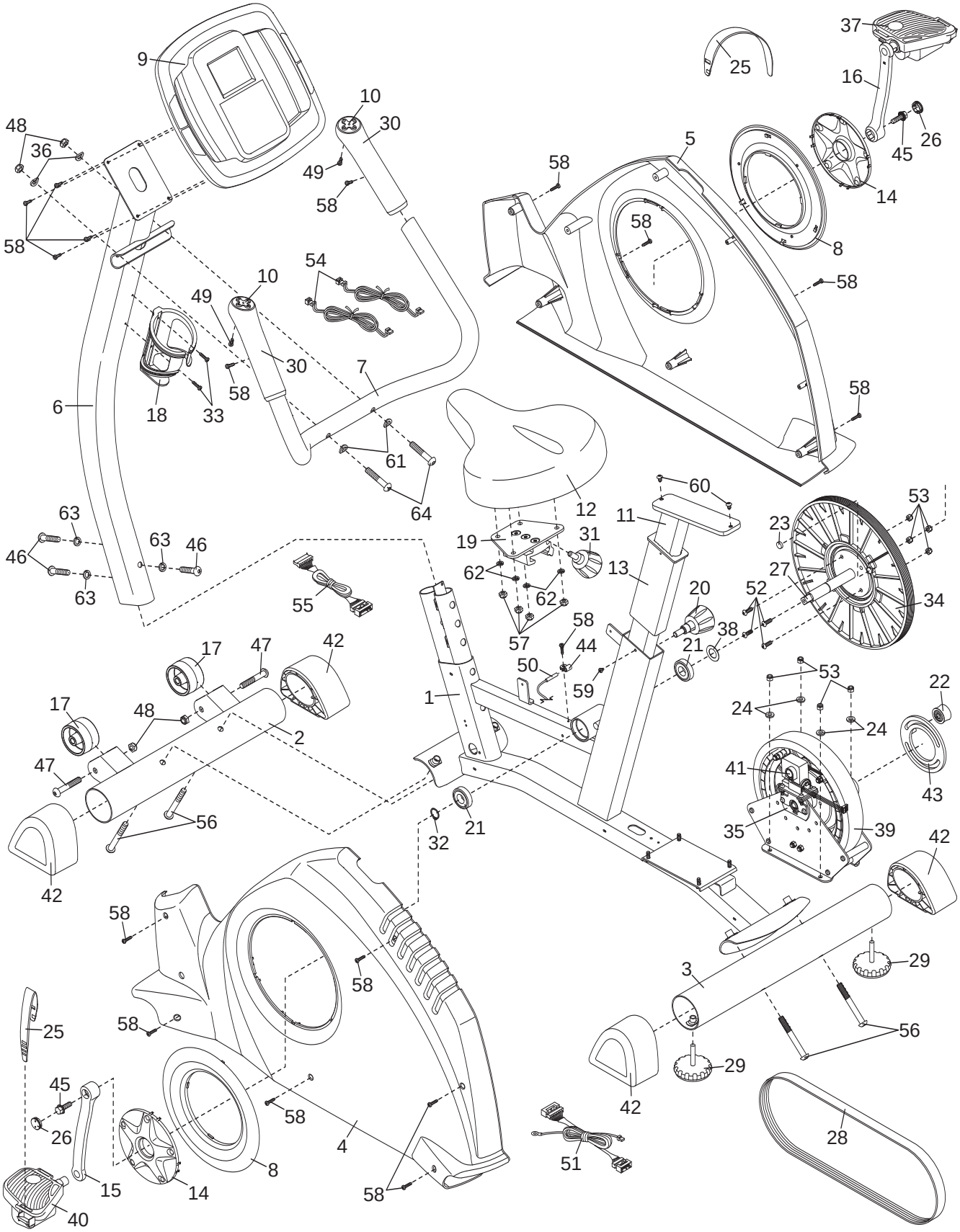
R0707A