EXPLODED DRAWING A—MODEL NO. RBEX3976.0 R1206A

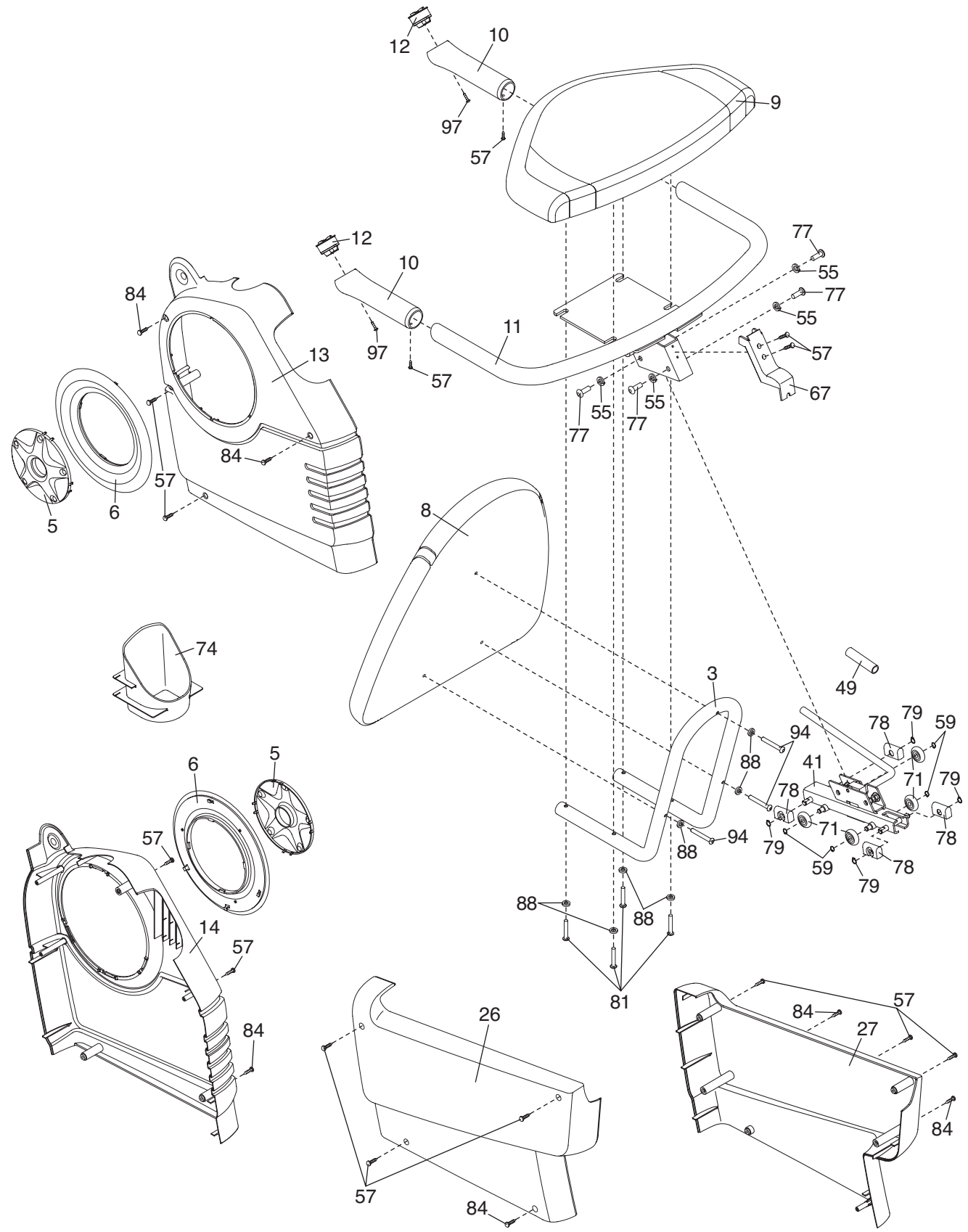
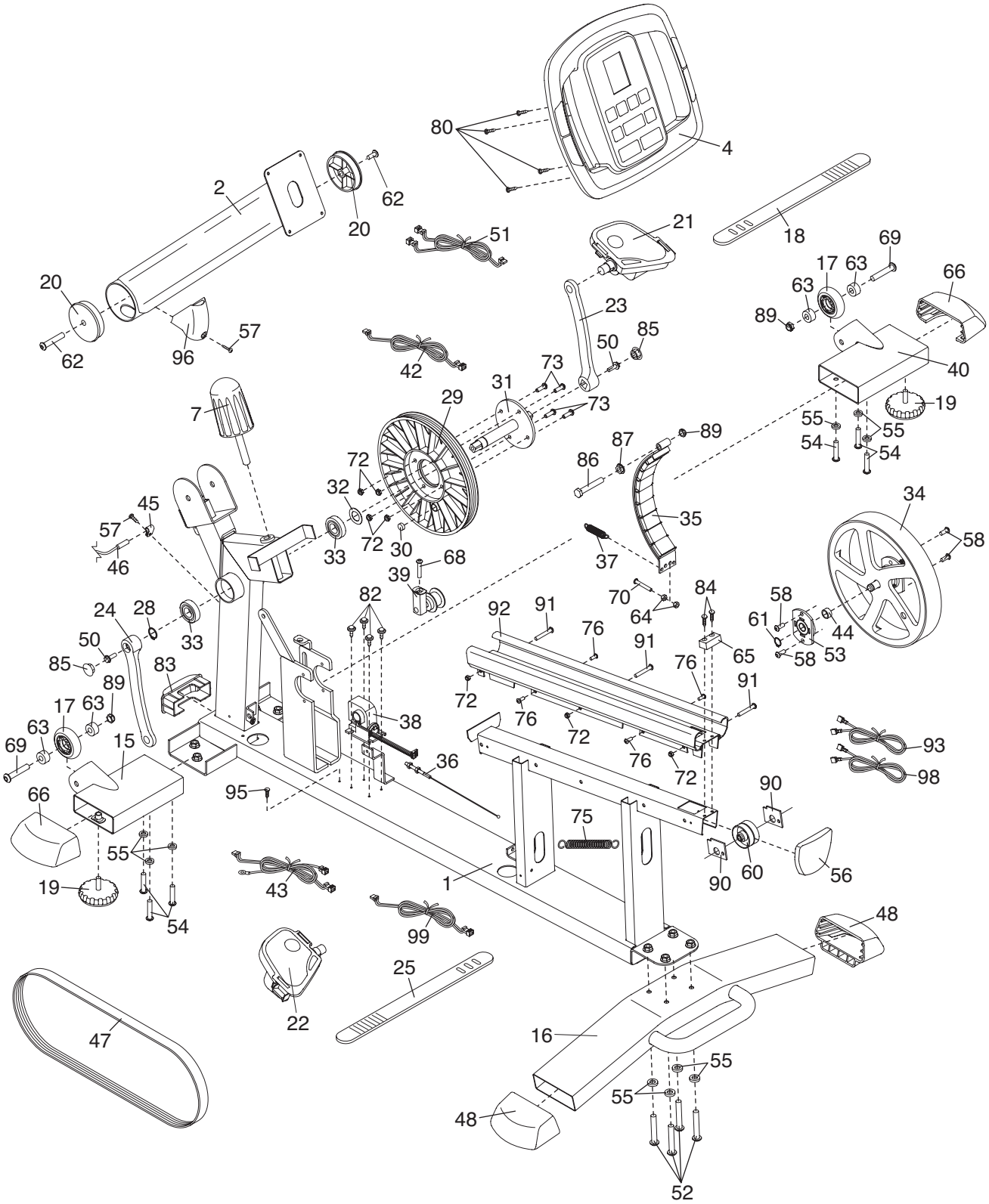
EXPLODED DRAWING B—MODEL NO. RBEX3976.0 R1206A