EXPLODED DRAWING A

Model No. SFEL51011.1 R0113A

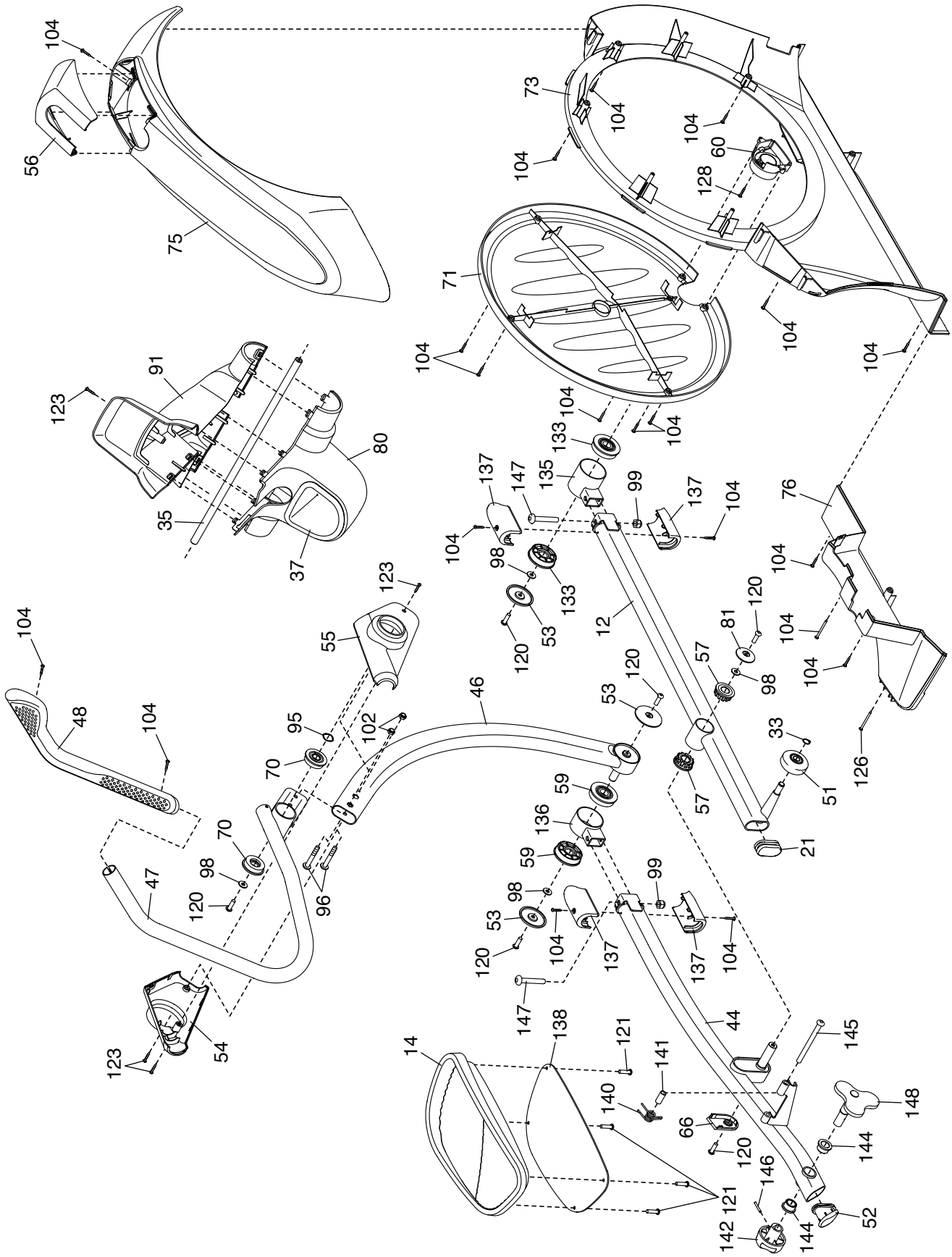

EXPLODED DRAWING B

Model No. SFEL51011.1 R0113A

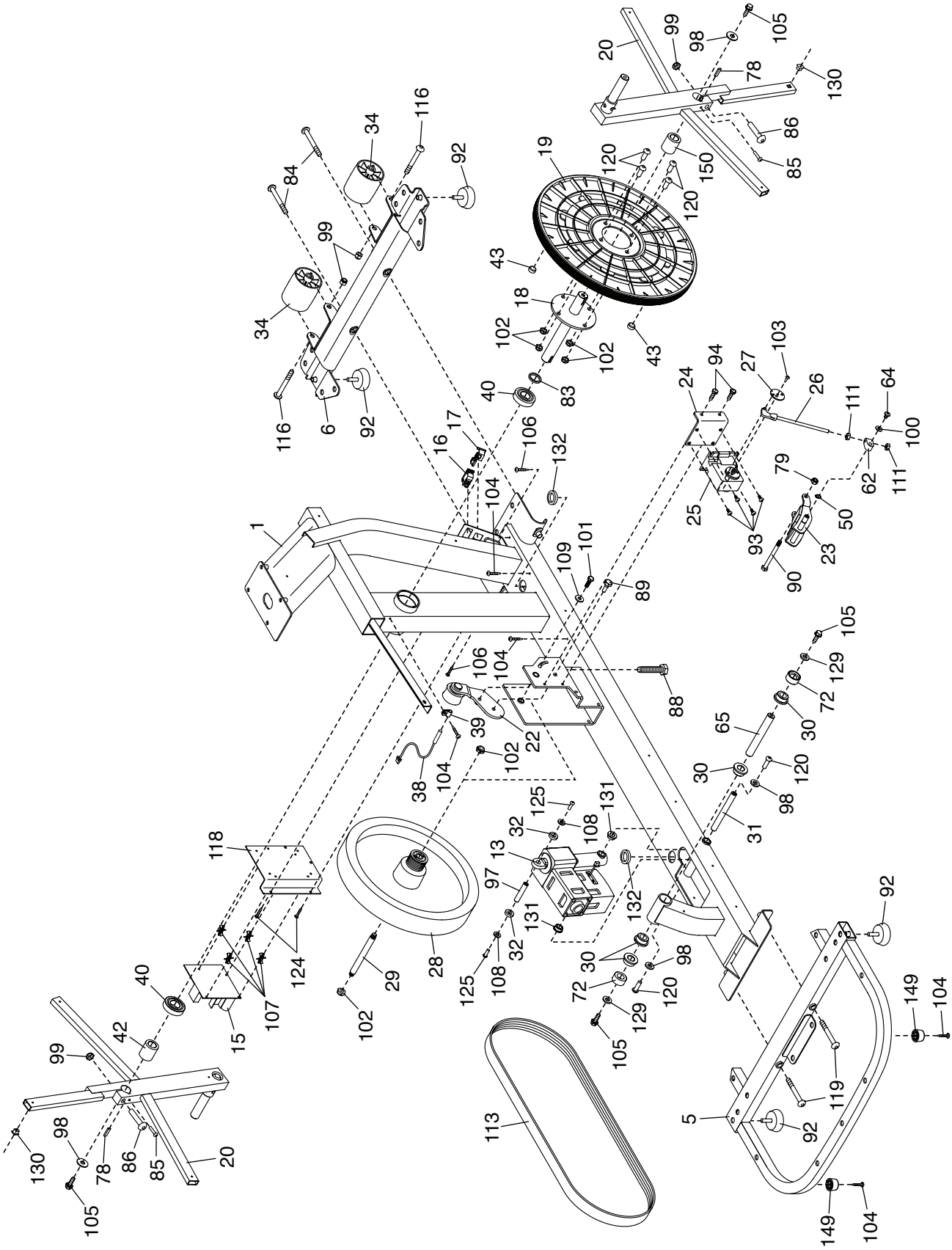

EXPLODED DRAWING C

Model No. SFEL51011.1 R0113A

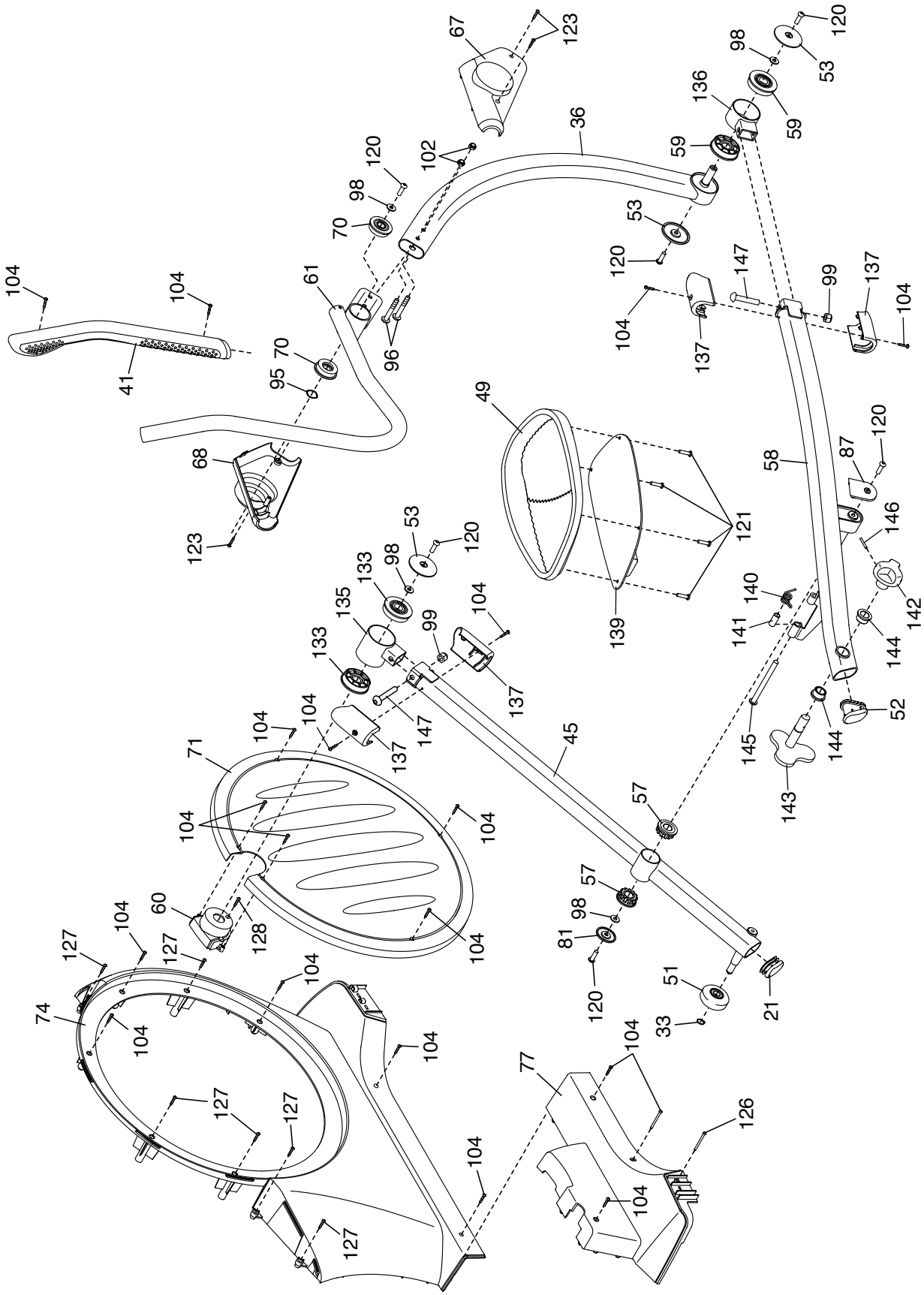

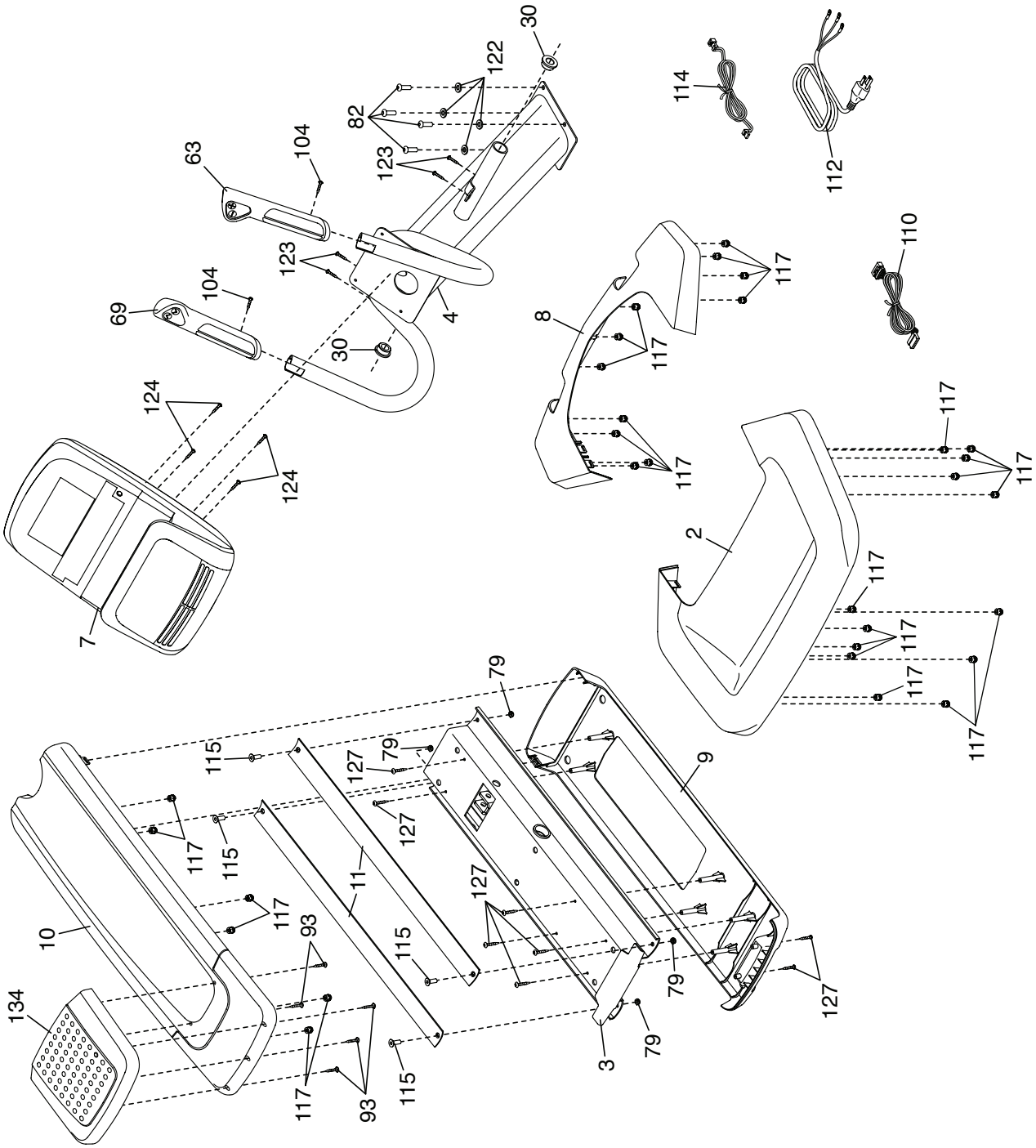
30
122
82
123
63
104
114
112
123
104
69
30
4
8
117
110
124
124
7
117
117
2
117
117
117
117
79
115
127
79
9
117
115
127
11
127
10
117
93
115
134
117
93
115
3
79
79
127