EXPLODED DRAWING A

Model No. SFEL59912.0 R0912A

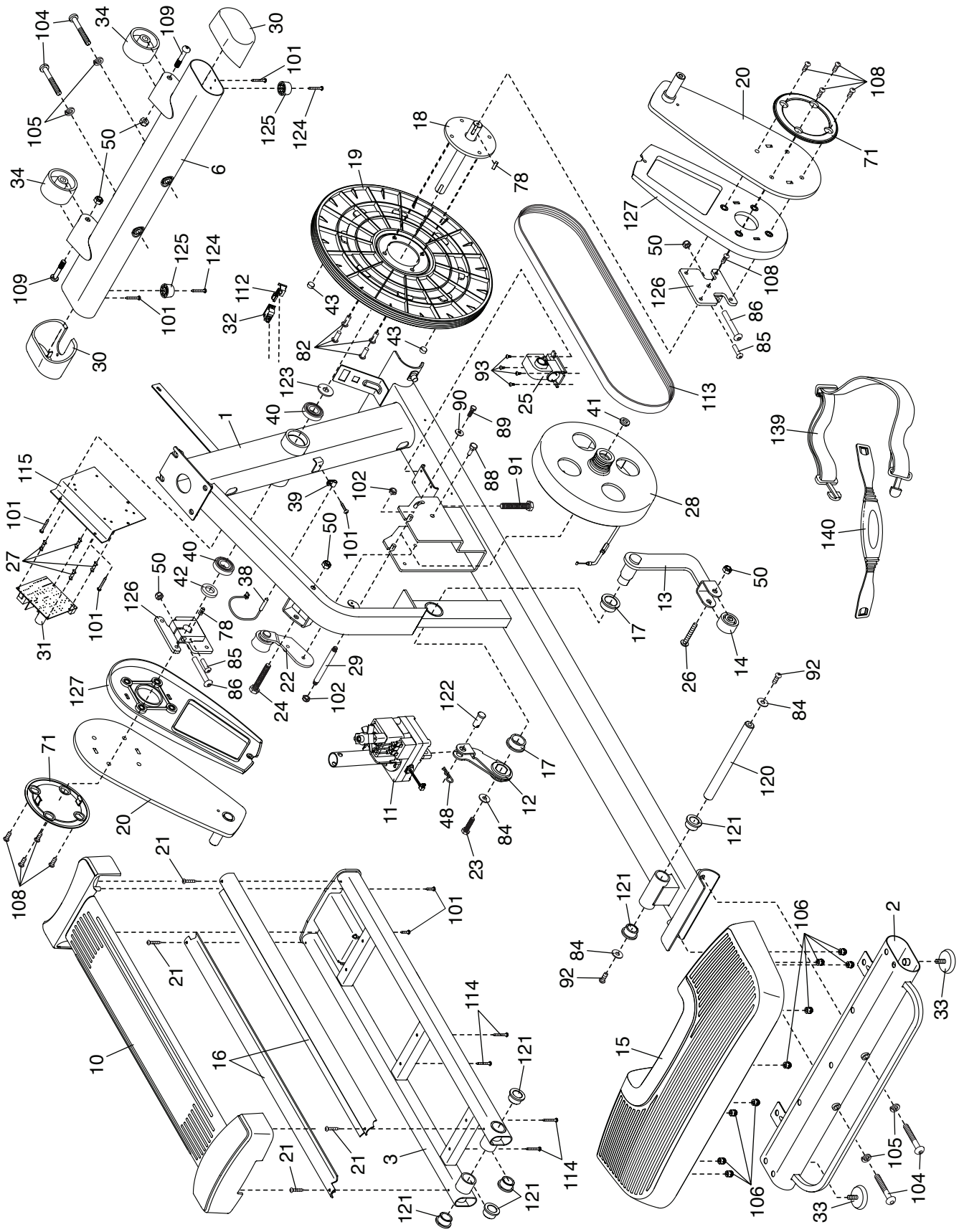

EXPLODED DRAWING B

Model No. SFEL59912.0 R0912A

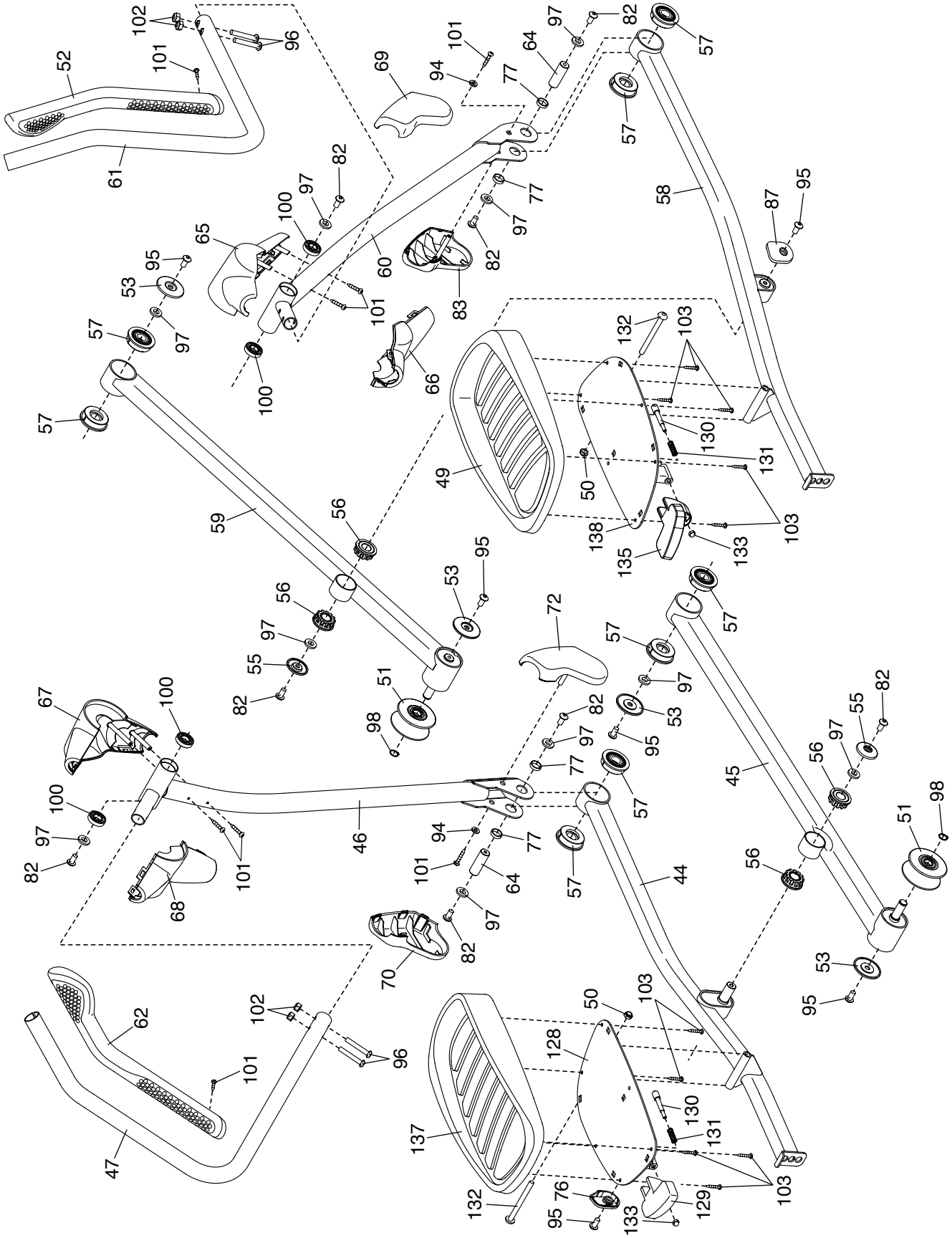

EXPLODED DRAWING C
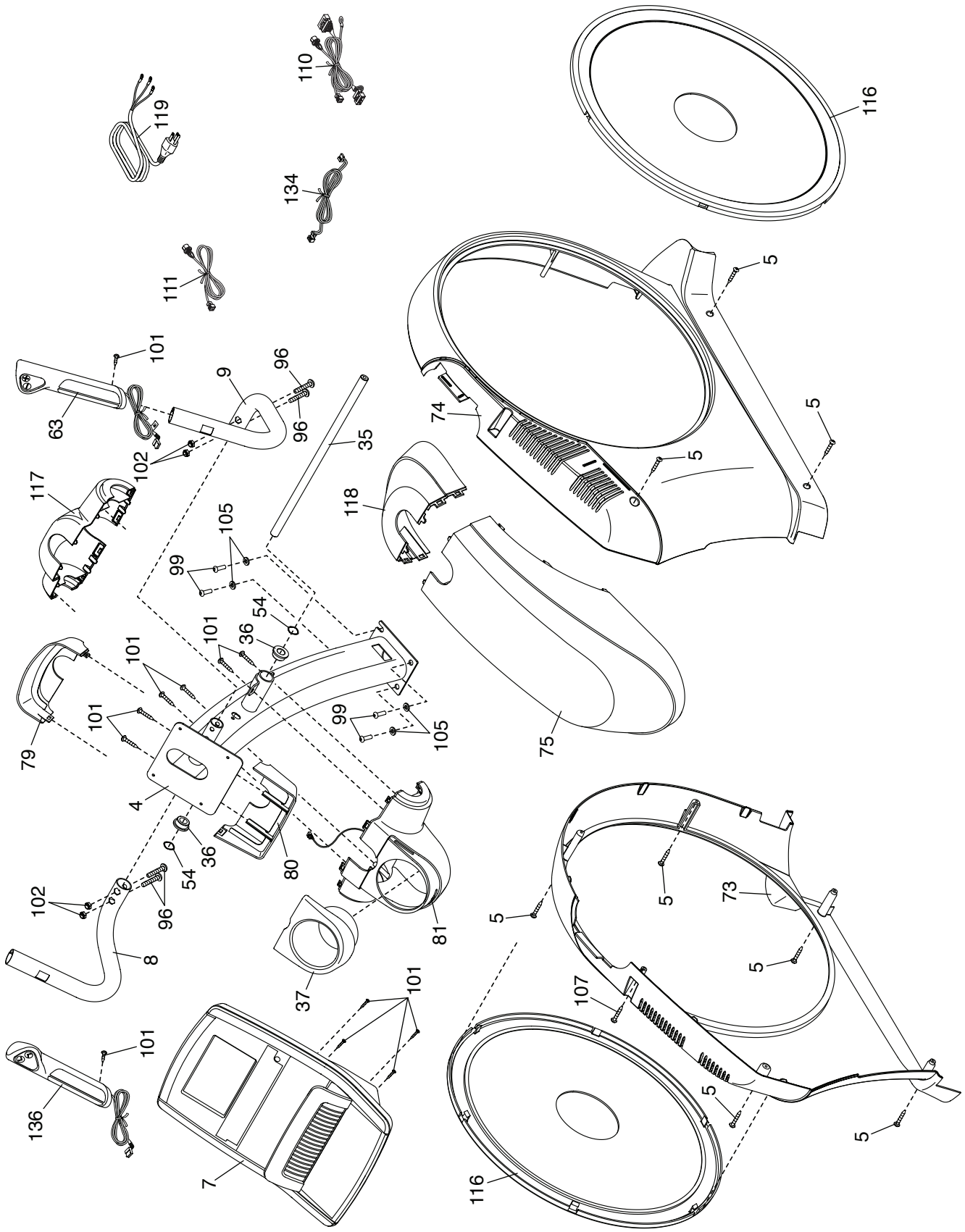
Model No. SFEL59912.0 R0912A